PRELIMINARY PLAN FOR

THE SHOPS AT HAWK'S LANDING

POST ROAD
TOWNSHIP OF JEROME, OH 43064

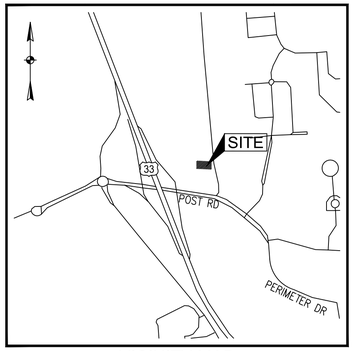

VICINITY MAP
NOT TO SCALE

PROJECT DESCRIPTION

PROPOSED SUBDIVISION INTO THREE SEPARATE PARCELS. PROJECT INCLUDES PROPOSED PUBLIC UTILITY INFRASTRUCTURE, A ROADWAY TO SERVE FUTURE DEVELOPMENT. DETENTION WILL BE INSTALLED TO SERVE THE PROPOSED ROADWAY IMPROVEMENTS.

SITE ZONING

JEROME TOWNSHIP ZONING: RR – REGIONAL RETAIL DISTRICT

The R/W is over an acre. Disturbance will likely be more than 1 acre.

DETENTION SUMMARY

DETENTION WILL CONSIST OF PROPOSED UNDERGROUND DETENTION FACILITY TO SERVE THE NEW ROADWAY INFRASTRUCTURE. DISTURBANCE WILL BE LESS THAN 1.0 ACRES THEREFORE WATER QUALITY PROVISIONS ARE NOT REQUIRED.

FLOOD NOTE

THE SITE IS LOCATED IN ZONE X ACCORDING TO FEMA MAP 39159C0500D DATED DECEMBER 16, 2008

BENCH MARKS

ALL BENCH MARKS AND ELEVATIONS SHOWN UPON THIS PLAN ARE BASED ON THE NORTH AMERICAN VERTICAL DATUM OF 1988 (NAVD88). HORIZONTAL CONTROLS ARE TIED TO GPS OBSERVATIONS USING THE STATE OF OHIO DEPARTMENT OF TRANSPORTATION VRS SYSTEM, BASED ON THE STATE PLANE COORDINATE SYSTEM, OHIO NORTH/SOUTH ZONE, NORTH AMERICAN DATUM OF 1983, ALSO KNOWN AS NAD83.

B.M. #1
BENCHMARK ON HYDRANT
NORTHING: 162304.4420'
EASTING: 1778702.2360'
ELEV.= 939.60'

UTILITY CONTACTS

STORM
UNION COUNTY ENGINEERING
233 WEST 6TH STREET
MARYSVILLE, OH 4304
937-645-3018

STORM
JEROME TOWNSHIP
9777 INDUSTRIAL PARKWAY
PLAIN CITY, OHIO 43064
(CONTACT: ERIC SNOWDEN)
614-873-4480

WATER
CITY OF MARYSVILLE
18000 RAYMOND RD
MARYSVILLE, OHIO 43040
937-645-7350

ELECTRIC
AEP OHIO
700 MORRISON ROAD
GAHANNA, OHIO 43230
(CONTACT: BRENT GATES)
614-883-6802

SANITARY
CITY OF MARYSVILLE
12901 BEECHER GAMBLE RD
MARYSVILLE, OHIO 43040
937-645-7344

GAS
COLUMBIA GAS
3550 JOHNNY APPLESEED COURT
COLUMBUS, OHIO 43231
(CONTACT: DAVID BEADLE)
614-582-9004

State variances

OHIO Utilities Protection SERVICE
811 or 1-800-362-2764
Call Before You Dig

STANDARD CONSTRUCTION DRAWINGS

OHIO DEPARTMENT OF TRANSPORTATION		UNION COUNTY OHIO		CITY OF MARYSVILLE		
CB-2-2B	MH-3	NO.06	STM-16	SAS-08	WTR-01	WTR-08
CB-2-3		NO.07	SAS-01	SAS-09	WTR-03	WTR-09
CB-2-5		NO.13	SAS-02	SAS-10	WTR-05	
CB-2-6		NO.17	SAS-03	SAS-15	WTR-06	
CB-3A		NO.20	SAS-07	SAS-18	WTR-07	

Public or private?

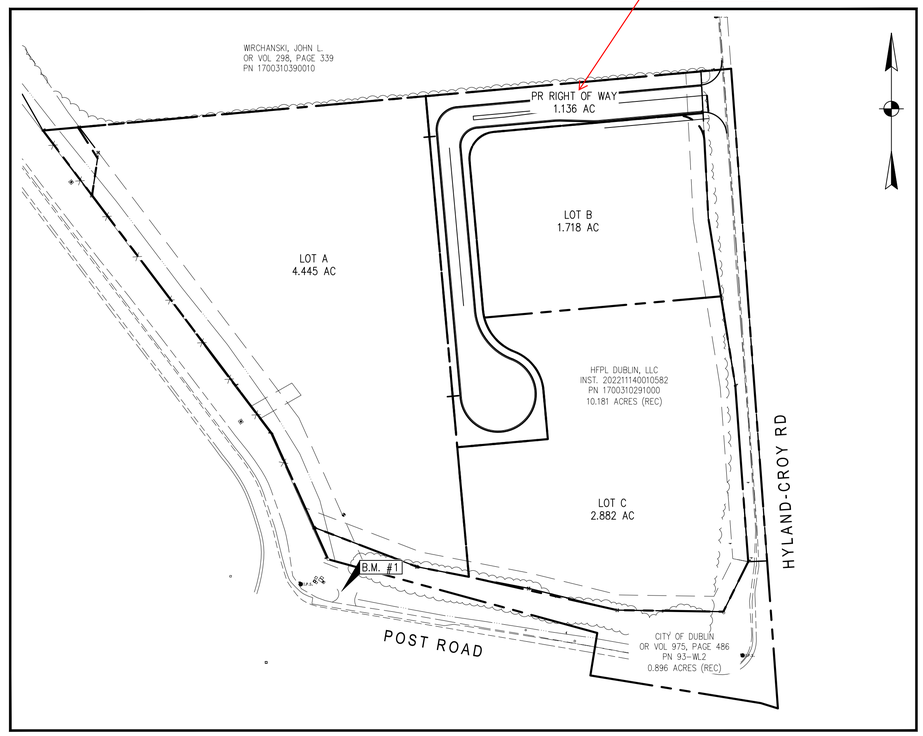

INDEX MAP

0 50 100 200

SCALE: 1 IN = 100 FT

INDEX OF SHEETS

COVER SHEET 01
GENERAL NOTES & DETAILS 02
EXISTING CONDITIONS 04
SITE PLAN 05
UTILITY PLAN 06
GRADING PLAN 07
EROSION & SEDIMENT CONTROL PLN 08
EROSION & SEDIMENT CONTROL DETAILS 09
STORM PROFILES 10-11
PLAN & PROFILE 12-13
SANITARY PLAN & PROFILE 14-17
SOILS MAP 18

OWNER

BOOS DEVELOPMENT GROUP, INC.
410 PARK PLACE BLVD, SUITE 100
CLEARWATER, FLORIDA 33759
CONTACT: CURT NEEL
PHONE: (727) 669-2900
EMAIL: CNEEL@BOOSDEVELOPMENT.COM

SURVEYOR

THE MANNIK & SMITH GROUP, INC.
1160 DUBLIN ROAD, SUITE 100
COLUMBUS, OHIO 43215
CONTACT: NICK DELVALLE
PHONE: (614) 441-4222
EMAIL: NDELVALLE@MANNIKSMITHGROUP.COM

ENGINEER OF RECORD

Mannik Smith GROUP
TECHNICAL SKILL. CREATIVE SPIRIT.
www.MannikSmithGroup.com

CONTACT: KYLE J. WRENTMORE, P.E.
ADDRESS: 1160 DUBLIN ROAD, SUITE 100
COLUMBUS, OH 43215
PHONE: 614.441.4222
EMAIL: KWRENTMORE@MANNIKSMITHGROUP.COM

KYLE J. WRENTMORE, PE DATE
REGISTERED PROFESSIONAL ENGINEER

PRELIMINARY
NOT FOR CONSTRUCTION

REV NO	DATE	BY	REVISION DESCRIPTION

PROJECT DATE: 05/23/24
PROJECT NO.: B1740002

01

Image\Rem\MSG\data\Projects\A-E\B1740002\CAD\SHEETS\B1740002_COVER SHEET.dwg Last saved:5/23/2024 1:15 PM by ABakers, plotted:5/23/2024 1:23 PM

GENERAL CONSTRUCTION NOTES:

THE CURRENT UNION COUNTY AND OHIO DEPARTMENT OF TRANSPORTATION CONSTRUCTION AND MATERIAL SPECIFICATIONS INCLUDING ALL SUPPLEMENTS THERETO, TOGETHER WITH THE REQUIREMENTS OF UNION COUNTY IN FORCE ON THE DATE OF THE CONTRACT, SHALL GOVERN ALL MATERIALS, METHODS OF CONSTRUCTION, AND WORKMANSHIP INVOLVED IN THE IMPROVEMENTS SHOWN ON THESE PLANS, EXCEPT, AS SUCH SPECIFICATIONS ARE MODIFIED BY THE FOLLOWING SPECIFICATIONS OR BY THE CONSTRUCTION DETAILS SET FORTH HEREIN.

THE CONTRACTOR SHALL NOTIFY UNION COUNTY ENGINEER 24 HOURS PRIOR TO CONSTRUCTION.

THE CONTRACTOR SHALL OBTAIN ALL NECESSARY PERMITS.

THE CONTRACTOR SHALL CONFINE HIS ACTIVITIES TO THE PROPOSED ON-SITE CONSTRUCTION AREAS OR THE EXISTING RIGHT-OF-WAYS, CONSTRUCTION AND PERMANENT EASEMENTS AND SHALL NOT TRESPASS UPON OTHER PRIVATE PROPERTY WITHOUT THE WRITTEN CONSENT OF THE OWNER. IN GENERAL, LOTS SHALL BE PROTECTED FROM DISTURBANCE OR CONSTRUCTION TRAFFIC SO THAT FUTURE ON-SITE SANITARY SYSTEMS REMAIN VIABLE.

ALL ITEMS OF WORK CALLED FOR ON THE PLANS FOR WHICH NO SPECIFIC METHOD OF PAYMENT IS PROVIDED SHALL BE PERFORMED BY THE CONTRACTOR AND THE COST OF THE SAME SHALL BE INCLUDED IN THE PRICE BID FOR THE VARIOUS RELATED ITEMS.

ALL FIELD TILE BROKEN DURING EXCAVATION SHALL BE REPLACED TO ORIGINAL CONDITION OR CONNECTED TO THE STORM SEWER SYSTEM AS DIRECTED BY THE ENGINEER.

THE CONTRACTOR SHALL CAREFULLY PRESERVE BENCH MARKS, PROPERTY CORNERS, REFERENCE POINTS, STAKES AND OTHER SURVEY REFERENCE MONUMENTS OR MARKERS. IN CASES OF WILLFUL OR CARELESS DESTRUCTION, THE CONTRACTOR SHALL BE RESPONSIBLE FOR RESTORATION OF MARKERS. RESETTING OF MARKERS SHALL BE PERFORMED BY AN OHIO PROFESSIONAL SURVEYOR.

THE CONTRACTOR SHALL DISPOSE OF ALL SURPLUS EXCAVATION, AS DIRECTED BY THE OWNER.

THE DESIGN ENGINEER WILL NOT BE RESPONSIBLE FOR MEANS, METHODS, PROCEDURES, TECHNIQUES, OR SEQUENCES OF CONSTRUCTION THAT ARE NOT SPECIFIED HEREIN. THE DESIGN ENGINEER WILL NOT BE RESPONSIBLE FOR SAFETY ON THE JOB SITE, OR FOR FAILURE BY THE CONTRACTOR TO PERFORM WORK ACCORDING TO CONTRACT DOCUMENTS.

THE CONTRACTOR AND SUB-CONTRACTOR SHALL BE SOLELY RESPONSIBLE FOR COMPLYING WITH ALL FEDERAL, STATE AND LOCAL SAFETY REQUIREMENTS, TOGETHER WITH EXERCISING PRECAUTIONS AT ALL TIMES FOR THE PROTECTION OF PERSONS (INCLUDING EMPLOYEES) AND PROPERTY. IT IS ALSO THE SOLE RESPONSIBILITY OF THE CONTRACTOR AND SUB-CONTRACTOR TO INITIATE, MAINTAIN AND SUPERVISE ALL SAFETY REQUIREMENTS, PRECAUTIONS AND PROGRAMS IN CONNECTION WITH THE WORK.

ALL TRAFFIC CONTROL DEVICES SHALL BE FURNISHED, ERECTED, MAINTAINED AND REMOVED BY THE CONTRACTOR IN ACCORDANCE WITH THE "OHIO MANUAL OF TRAFFIC CONTROL DEVICES FOR CONSTRUCTION AND MAINTENANCE OPERATIONS", COPIES OF WHICH ARE AVAILABLE FROM THE OHIO DEPARTMENT OF TRANSPORTATION, BUREAU OF TRAFFIC, 25 SOUTH FRONT STREET, COLUMBUS, OHIO 43215.

THE IDENTITY AND LOCATION OF THE EXISTING UNDERGROUND FACILITIES KNOWN TO BE LOCATED IN THE CONSTRUCTION AREA HAVE BEEN SHOWN ON THE PLANS AS ACCURATELY AS PROVIDED BY THE OWNER OF THE UNDERGROUND UTILITY. UNION COUNTY AND/OR ENGINEER ASSUMES NO RESPONSIBILITY AS TO THE ACCURACY OR THE DEPTHS OF THE UNDERGROUND FACILITIES WHETHER SHOWN ON THE PLANS OR NOT.

SUPPORT, PROTECTION AND RESTORATION OF ALL EXISTING UTILITIES AND APPURTENANCES SHALL BE THE RESPONSIBILITY OF THE CONTRACTOR. THE COST OF THIS WORK SHALL BE INCLUDED IN THE PRICE BID FOR THE VARIOUS ITEMS.

THE CONTRACTOR SHALL CAUSE NOTICE TO BE GIVEN TO THE OHIO UTILITIES PROTECTION SERVICE (TELEPHONE 800-362-2764 – TOLL FREE) AND TO THE OWNERS OF UNDERGROUND UTILITY FACILITIES SHOWN ON THE PLANS WHO ARE NOT MEMBERS OF A REGISTERED UNDERGROUND PROTECTION SERVICE IN ACCORDANCE WITH SECTION 153.64 OF THE REVISED CODE. THE ABOVE MENTIONED NOTICE SHALL BE GIVEN AT LEAST TWO WORKING DAYS PRIOR TO START OF CONSTRUCTION.

UNLESS OTHERWISE NOTED ON THE PLANS ALL STORM SEWERS SHALL BE SMOOTH WALLED ADS N-12 PIPE AS MANUFACTURED BY ADVANCED DRAINAGE SYSTEMS INCORPORATED. THIS ALSO INCLUDES ANY AND ALL UNDERDRAIN PIPES FOR THE ROADWAY/LEACHFIELD SYSTEMS INSTALLED FOR THE PROJECT. GRANULAR BACKFILL SHALL BE USED IN ALL INSTANCES OF PAVEMENT CROSSINGS. MATERIALS SHALL BE COMPACTED. GRANULAR MATERIAL, ITEM 304, PLACED WITHIN LIMITS SHOWN ON THE PLAN INCLUDING AROUND ALL INLET STRUCTURES. GRANULAR BACKFILL SHALL EXTEND FROM THE BOTTOM OF THE TRENCH TO A PLANE 6-INCHES BELOW THE SUBGRADE.

WHERE THE STORM SEWER CROSSES A PROPOSED RIGHT-OF-WAY THE TRENCH BACKFILL SHALL BE COMPACTED GRANULAR MATERIAL, ITEM 304, FROM THE BOTTOM OF THE TRENCH TO A PLANE 6-INCHES BELOW THE SUBGRADE. THE LIMITS OF PLACEMENT SHALL BE FROM RIGHT-OF-WAY LINE TO RIGHT-OF-WAY LINE. ALL OTHER TRENCH BACKFILL SHALL BE COMPACTED TYPE C, UNLESS OTHERWISE NOTED ON THE PLANS. COST OF BACKFILL TO BE INCLUDED IN THE PRICE BID FOR THE VARIOUS SEWER ITEMS.

PIPE WITH LESS THAN ONE FOOT OF COVER TO SURFACE OF PAVEMENT SHALL BE REINFORCED CONCRETE PIPE, CLASS V, OR SHALL BE CONCRETE ENCASED.

CONTRACTOR SHALL MAKE PROVISIONS FOR OUTLETTING ROADWAY UNDERDRAINS. THESE SHALL INCLUDE, WHERE APPLICABLE, CROSSING OF STREETS, CONNECTION TO HEADWALLS, AND OUTLETTING INTO DITCHES PER UNDERDRAIN OUTLET DETAIL.

ALL UTILITY AND STORMWATER EASEMENT AREAS MUST BE CLEAR OF TREES AND OTHER VEGETATION.

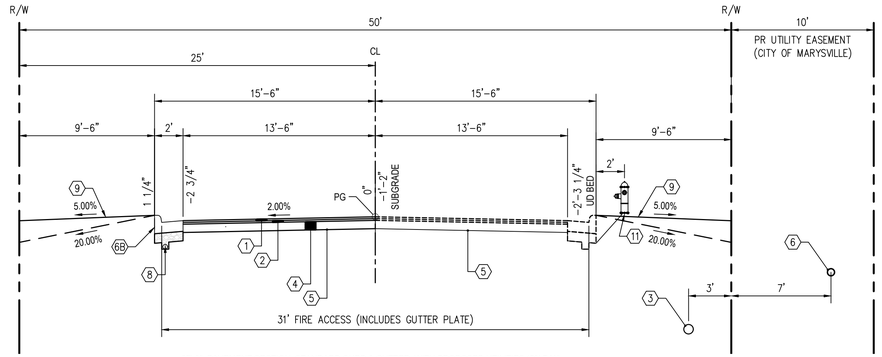

27'-0" PAVEMENT SECTION, STANDARD CURB & GUTTER, WITH PROPOSED UTILITIES (50' R/W)

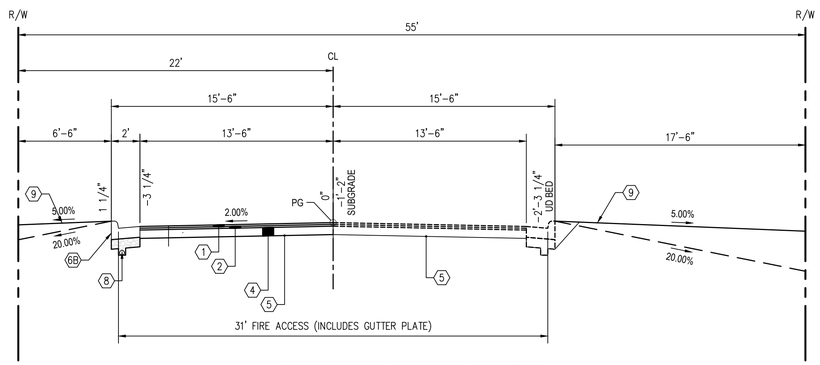

27'-0" PAVEMENT SECTION, STANDARD CURB & GUTTER (55' R/W)

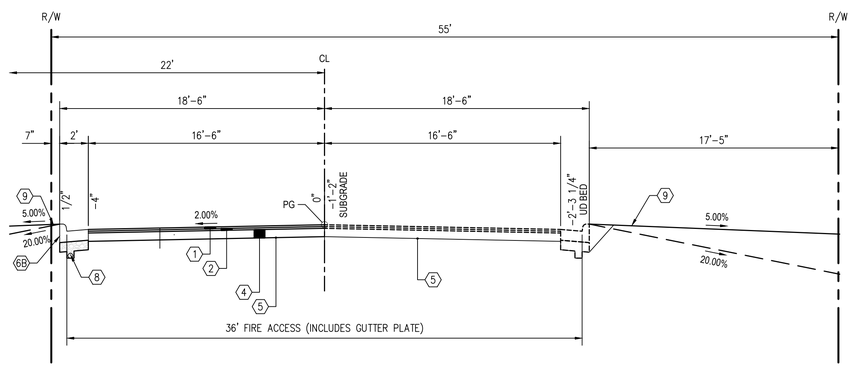

33'-0" PAVEMENT SECTION, STANDARD CURB & GUTTER (55' R/W)

LEGEND

1	1-1/2" SURFACE COURSE, TYPE 1 (ITEM 441)
2	2-0" INTERMEDIATE COURSE, TYPE 2 (ITEM 441)
3	PROPOSED SANITARY MAIN (CITY OF MARYSVILLE)
4	8" AGGREGATE BASE (ITEM 304)
5	SUBGRADE COMPACTION (ITEM 204)* SEE GEOTECHNICAL REPORT FOR STABILIZATION DETAILS.
6A	PROPOSED WATER MAIN (CITY OF MARYSVILLE)
6B	6" CONCRETE STANDARD COMBINED CURB AND GUTTER 'TYPE 2' (UNION CO. STD DWG NO-7&10)
7	NOT USED.
8	4" PIPE UNDERDRAIN (ITEM 605), INVERT 2'-2" BELOW TOP OF CURB
9	SEEDING AND MULCHING (ITEM 659)
10	SUBGRADE COMPACTION (ITEM 203)*
11	FIRE HYDRANT (STD DWG _____)
UD	UNDERDRAIN
PG	POINT OF GRADATION
*	OR 5" AGGREGATE BASE (ITEM 304). REFER TO STD DWG 2300 AND GEOTECHNICAL REPORT FOR STABLIZATION DETAILS.

Does not match UCE standard. Will require variance

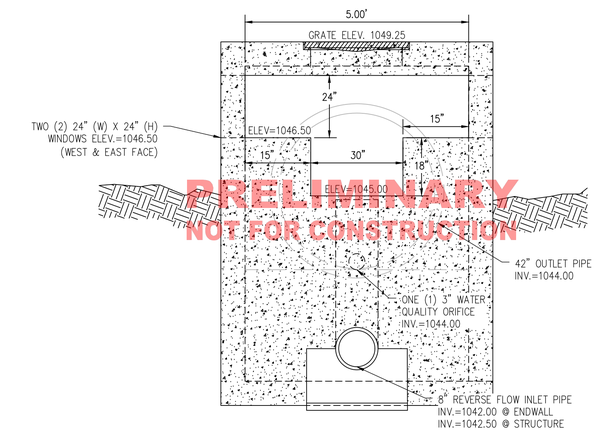

OUTLET CONTROL STRUCTURE (FRONT FACE VIEW)
MODIFIED ODOT 2-5 CATCH BASIN

NOT TO SCALE

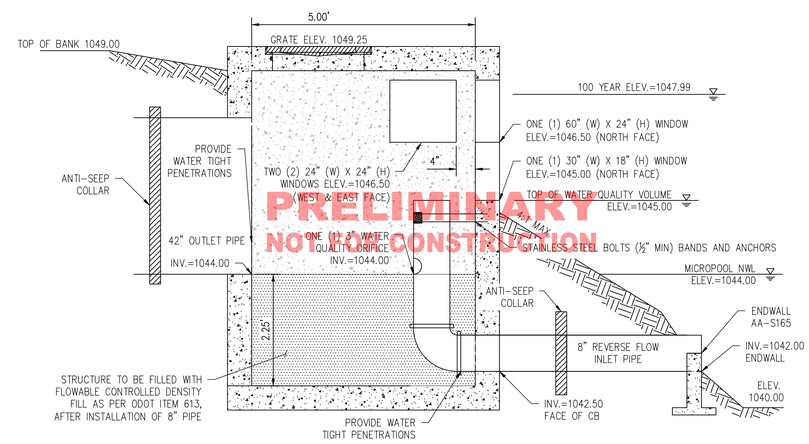

OUTLET CONTROL STRUCTURE (SIDE SECTION VIEW)
MODIFIED ODOT 2-5 CATCH BASIN

NOT TO SCALE

NO.	DATE	BY	DESCRIPTION

1160 DUBLIN ROAD
SUITE 100
COLUMBUS, OH 43215
TEL: 614.441.4222
FAX: 888.488.7340

PROJECT DATE: 05/23/24
PROJECT NO: B17400002
DRAWN BY: MAO
CHECKED BY: AAB

Mannik Smith GROUP
TECHNICAL SKILL. CREATIVE SPIRIT.
www.MannikSmithGroup.com

PREPARED FOR:
HFPL DUBLIN, LLC
4592 ULMERTON RD. SUITE 100
CLEARWATER, FL 33762

PRELIMINARY PLAN FOR
THE SHOPS AT HAWK'S LANDING
POST ROAD, PLAIN CITY, OH 43064

GENERAL NOTES & DETAILS

02

\\msgfileserv\MSGData\Projects\Projects A-E\B17400\02\CAD\SHEETS\B17400\02_GENERAL NOTES.dwg Last saved 5/23/2024 9:53 AM by ABakers, plotted 5/23/2024 1:24 PM

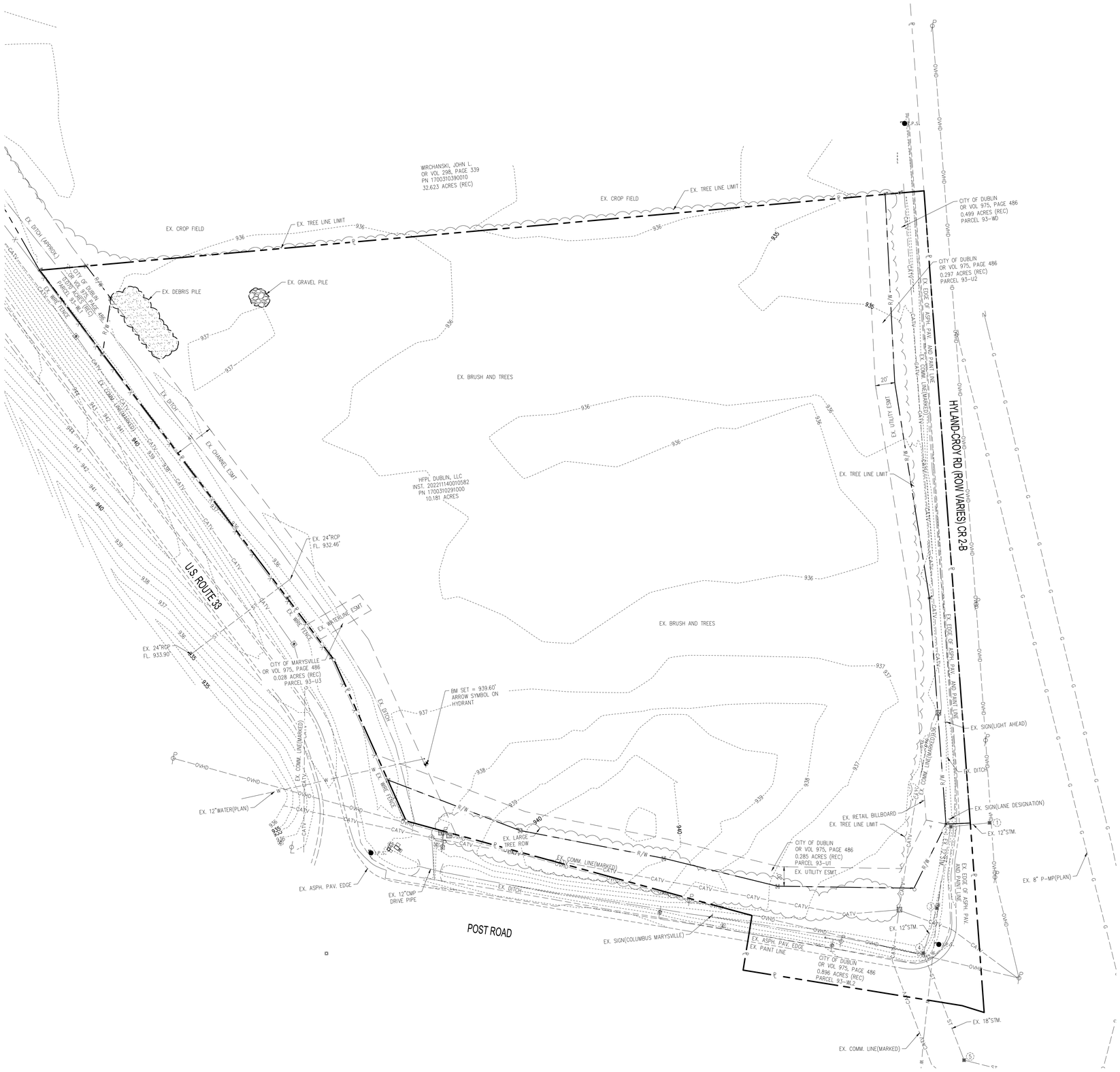

LEGEND

- PROPERTY LINE
- RIGHT OF WAY LINE
- EX OVERHEAD ELECTRIC
- EX WATER
- EX SANITARY SEWER
- EX STORM SEWER
- EX CONTOUR
- EX TELEPHONE PEDESTAL
- EX CABLE BOX/PEDESTAL
- EX POWER POLE
- EX LIGHT POLE
- EX HYDRANT
- EX WATER VALVE
- EX SANITARY MANHOLE
- EX CATCH BASIN
- EX CURB INLET
- EX CLEANOUT
- BENCHMARK
- TRAFFIC PULLBOX
- EX WATER MANHOLE
- EX TREE

EXISTING SITE DATA TABLE

ADDRESS:	POST ROAD, PLAIN CITY, OH 43064
PARCEL NO.:	1700310291000
PROPERTY OWNER	HFPL DUBLIN LLC.
ZONING CLASSIFICATION/DISTRICT:	AGRICULTURAL VACANT LAND
TOTAL SITE AREA:	+/- 10.18 AC
FLOOD INSURANCE RATE MAP NUMBER (FIRM):	39159C0500D
MOST RECENT EFFECTIVE DATE OF FIRM:	12/16/2008
FLOOD ZONE:	X

EXISTING SANITARY STRUCTURE TABLE

1 EX. SAN MH#2000
RIM 936.01'
FL 919.31' ~12"PVC N
FL 919.31' ~12"PVC E
FL 919.31' ~12"PVC SW

2 EX. SAN MH#2001
RIM 933.58'
FL 917.63' ~12"PVC NE
FL 917.63' ~12"PVC SW

0 25 50 100
SCALE: 1 IN = 50 FT

NO.	DATE	BY	DESCRIPTION

1160 DUBLIN ROAD
SUITE 100
COLUMBUS, OH 43215
TEL: 614.441.4222
FAX: 888.488.7340

PROJECT DATE: 05/23/24
PROJECT NO: B1740002
DRAWN BY: MAO
CHECKED BY: AAB

TECHNICAL SKILL. CREATIVE SPIRIT.
Mannik Smith GROUP
www.MannikSmithGroup.com

PREPARED FOR:
HFPL DUBLIN, LLC
4592 ULMERTON RD, SUITE 100
CLEARWATER, FL 33762

PRELIMINARY PLAN FOR
THE SHOPS AT HAWK'S LANDING
POST ROAD, PLAIN CITY, OH 43064

EXISTING CONDITIONS

\\msg\files\MSGData\Projects\Projects A-E\B1740002\CAD\SHEETS\B1740002_EXISTING CONDITIONS.dwg Last saved 5/23/2024 4:34 PM by MAoS, plotted 5/23/2024 1:24 PM

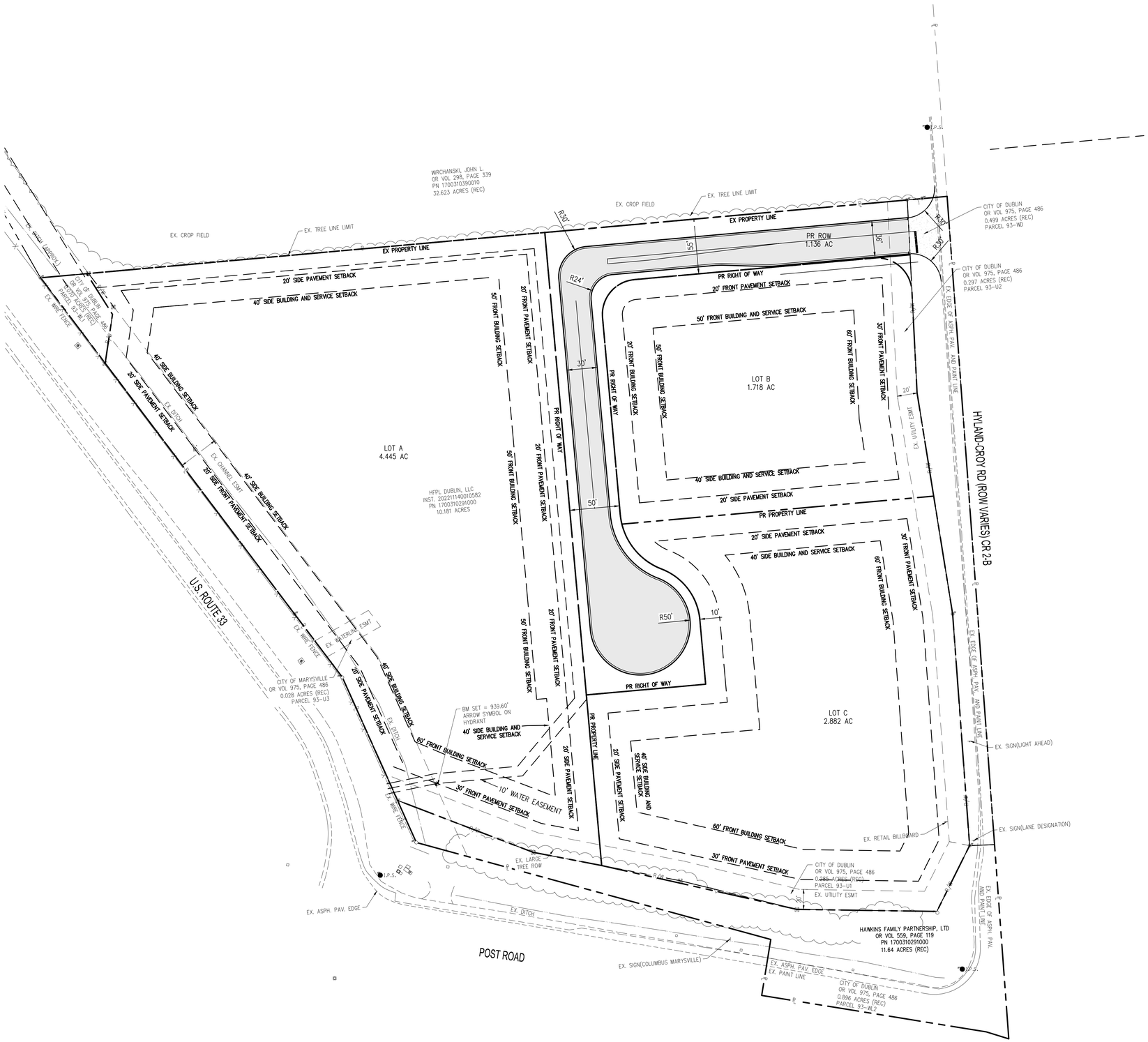

LEGEND

- PROPERTY LINE
- R/W — RIGHT OF WAY LINE
- BUILDING/PAVEMENT SETBACK LINE
- PROPOSED HEAVY DUTY ASPHALT
- PROPOSED CONCRETE PAVEMENT

SITE DATA TABLE

ADDRESS:	POST ROAD, JEROME TOWNSHIP, OH 43064
PARCEL NO.:	1700310291000
PROPERTY OWNER	HFPL DUBLIN LLC.
ZONING CLASSIFICATION/DISTRICT:	RR-REGIONAL RETAIL DISTRICT
LOT A AREA:	4.445 AC
LOT B AREA:	1.718 AC
LOT C AREA:	2.882 AC
FLOOD INSURANCE RATE MAP NUMBER (FIRM):	39159C0500D
MOST RECENT EFFECTIVE DATE OF FIRM:	12/16/2008
FLOOD ZONE:	X

0 25 50 100

SCALE: 1 IN = 50 FT

NO.	DATE	BY	DESCRIPTION

1160 DUBLIN ROAD
SUITE 100
COLUMBUS, OH 43215
TEL: 614.441.4222
FAX: 888.488.7340

PROJECT DATE: 05/23/24
PROJECT NO: B17400/02
DRAWN BY: MAO
CHECKED BY: AAB

Mannik Smith GROUP
TECHNICAL SKILL. CREATIVE SPIRIT.
www.MannikSmithGroup.com

PREPARED FOR:
HFPL DUBLIN, LLC
4592 ULMERTON RD, SUITE 100
CLEARWATER, FL 33762

PRELIMINARY PLAN FOR
THE SHOPS AT HAWK'S LANDING
POST ROAD, PLAIN CITY, OH 43064

SITE PLAN

\\mgfileserv\MSGData\Projects\Projects A-E\B17400\02\CAD\SHEETS\B17400\02_SITE PLAN.dwg Last saved 5/23/2024 1:21 PM by ABakare, plotted 5/23/2024 1:24 PM

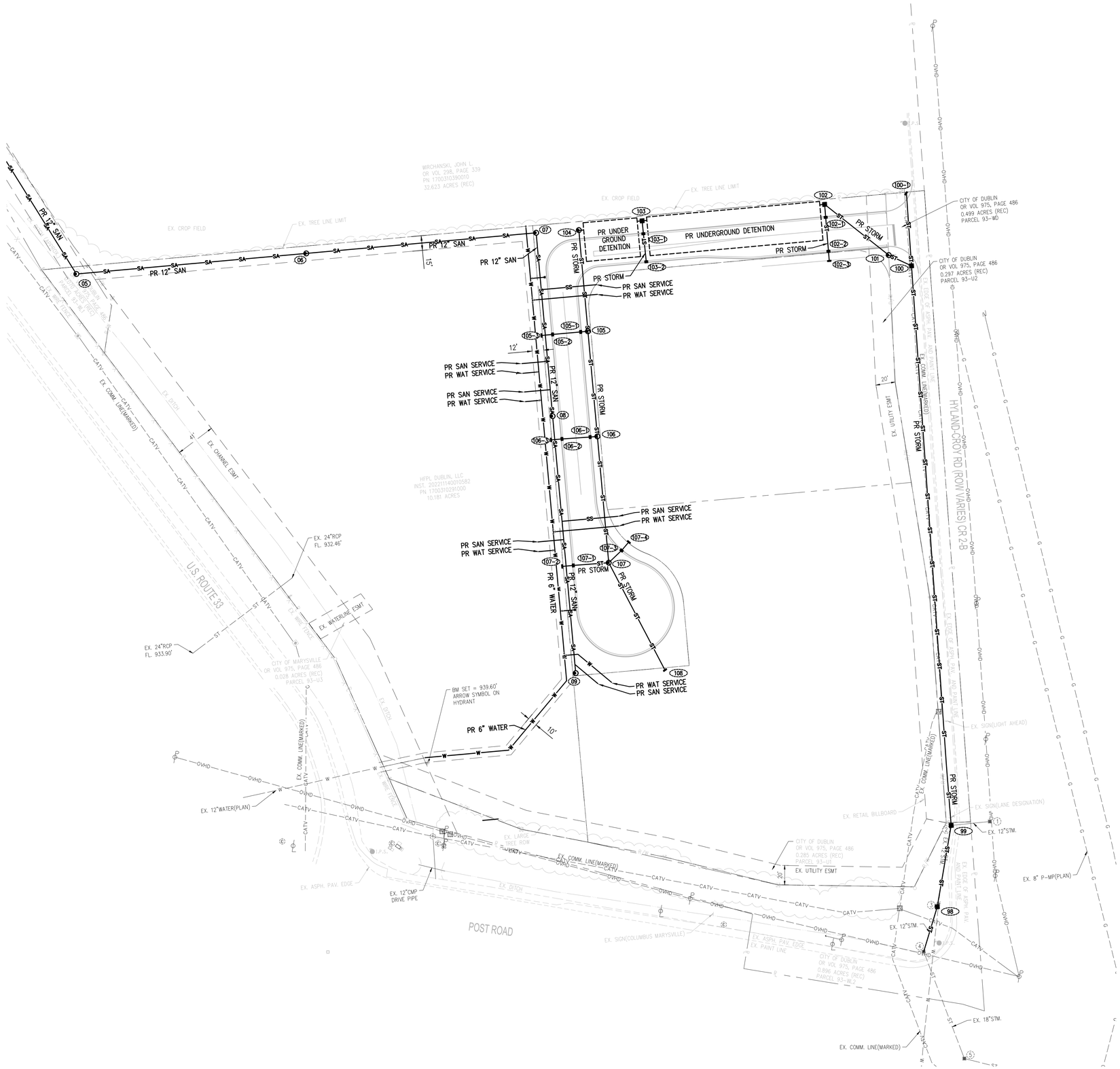

LEGEND

- PROPERTY LINE
- RIGHT OF WAY LINE
- EX OVERHEAD ELECTRIC
- EX WATER
- EX SANITARY SEWER
- EX STORM SEWER
- EX CONTOUR
- EX TELEPHONE PEDESTAL
- EX CABLE BOX/PEDESTAL
- EX POWER POLE
- EX LIGHT POLE
- EX HYDRANT
- EX WATER VALVE
- EX SANITARY MANHOLE
- EX CATCH BASIN
- EX CURB INLET
- EX CLEANOUT
- BENCHMARK
- TRAFFIC PULLBOX
- EX WATER MANHOLE
- EX TREE

NO.	DATE	BY	DESCRIPTION

1160 DUBLIN ROAD
SUITE 100
COLUMBUS, OH 43215
TEL: 614.441.4222
FAX: 888.488.7340

PROJECT DATE: 05/23/24
PROJECT NO: B17400.02
DRAWN BY: MAO
CHECKED BY: AAB

Mannik Smith GROUP
TECHNICAL SKILL. CREATIVE SPIRIT.
www.MannikSmithGroup.com

PREPARED FOR:
HFPL DUBLIN, LLC
4592 ULMERTON RD. SUITE 100
CLEARWATER, FL 33762

PRELIMINARY PLAN FOR
THE SHOPS AT HAWK'S LANDING
POST ROAD, PLAIN CITY, OH 43064

UTILITY PLAN

06

\\msgfiles\ABS\Data\Projects\Projects A-E\B17400\02\CAD\SHEETS\B17400\02_UTILITY PLAN.dwg Last saved 5/23/2024 12:42 PM by ABakale, plotted 5/23/2024 1:24 PM

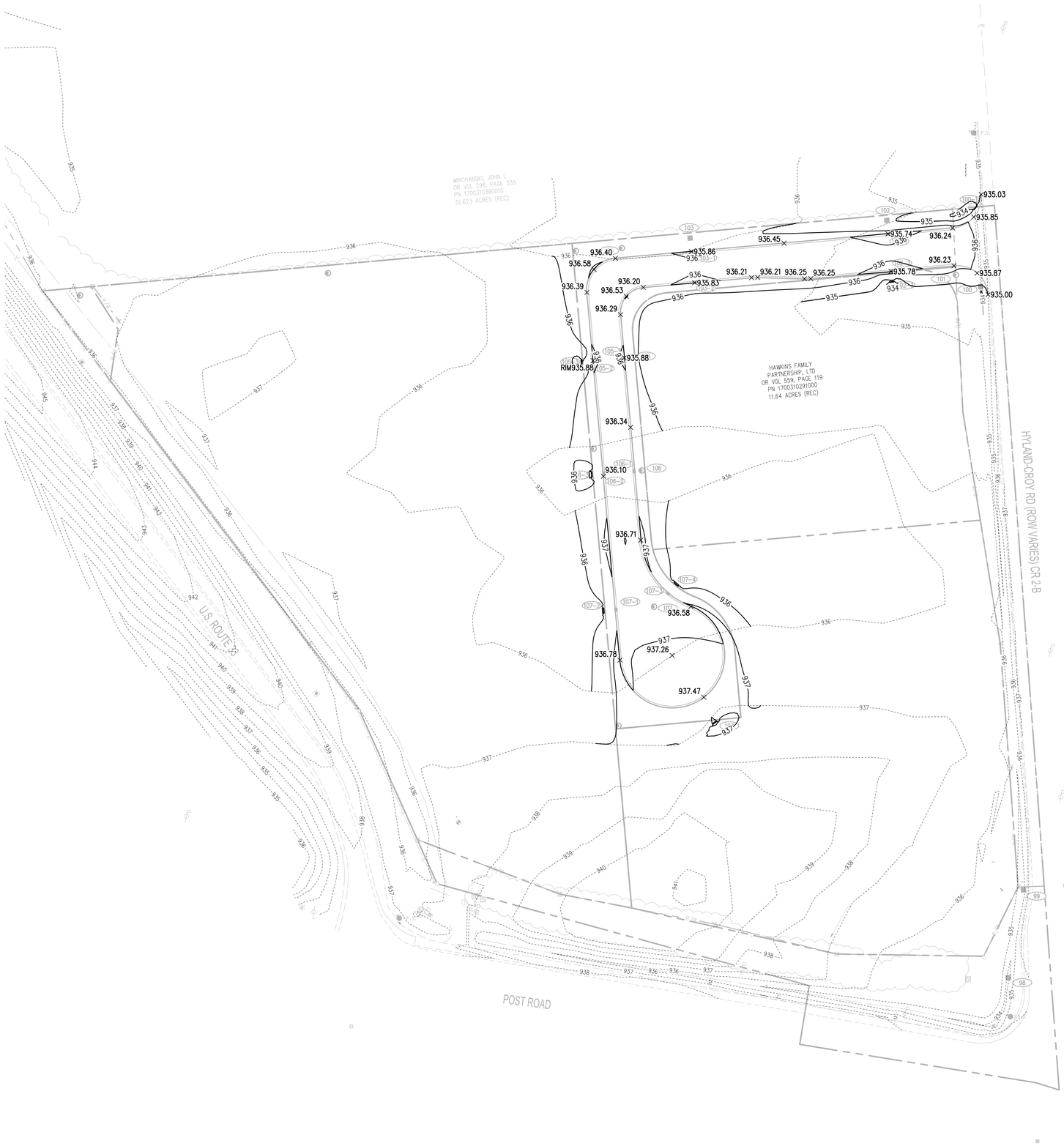

LEGEND

- PROPERTY LINE
- R/W — RIGHT OF WAY LINE
- 931 — EX CONTOUR
- 931 — CONTOUR
- RUNOFF FLOW DIRECTION

NOTES

1. ALL SPOTS ARE PAVEMENT ELEVATION, UNLESS OTHERWISE NOTED.
2. MATCH EXISTING PAVEMENT ELEVATIONS WHERE PROPOSED PAVEMENT MEETS EXISTING

0 25 50 100

SCALE: 1 IN = 50 FT

NO.	DATE	BY	DESCRIPTION

1160 DUBLIN ROAD
SUITE 100
COLUMBUS, OH 43215
TEL: 614.441.4222
FAX: 888.488.7340

PROJECT DATE: 05/23/24
PROJECT NO: B17400.02
DRAWN BY: MAO
CHECKED BY: AAB

Mannik Smith GROUP
TECHNICAL SKILL. CREATIVE SPIRIT.
www.MannikSmithGroup.com

PREPARED FOR:
HFPL DUBLIN, LLC
4592 ULMERTON RD, SUITE 100
CLEARWATER, FL 33762

PRELIMINARY PLAN FOR
THE SHOPS AT HAWK'S LANDING
POST ROAD, PLAIN CITY, OH 43064

GRADING PLAN

\\mspfiler\MSGData\Projects\Projects A-E\B17400.02\CAD\SHEETS\B17400.02_GRADING PLAN.dwg Last saved 5/23/2024 10:40 AM by ABakare, plotted 5/23/2024 1:25 PM

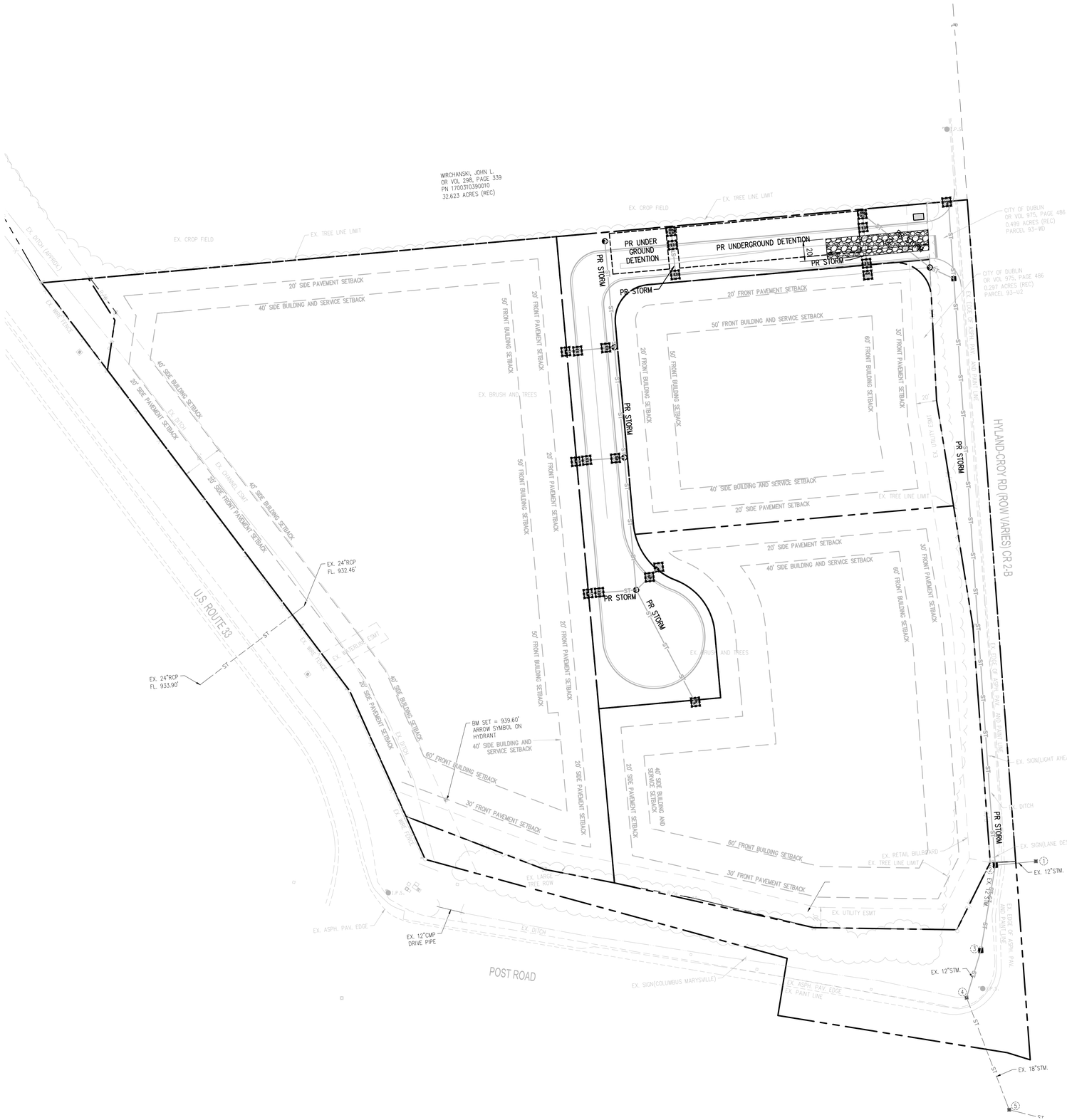

LEGEND

- EX CONTOUR
- EX STORM SEWER
- EX STORM CATCH BASIN
- EX CURB AND GUTTER INLET
- PR CONTOUR
- PR STORM LINE
- PR SILT FENCE
- PR STORM MANHOLE
- PR CATCH BASIN
- DANDY BAG
- CONCRETE WASHOUT
- CONSTRUCTION ENTRANCE

0 25 50 100

SCALE: 1 IN = 50 FT

NO.	DATE	BY	DESCRIPTION

1160 DUBLIN ROAD
SUITE 100
COLUMBUS, OH 43215
TEL: 614.441.4222
FAX: 888.488.7340

PROJECT DATE: 05/23/24
PROJECT NO: B17400002
DRAWN BY: MAO
CHECKED BY: AAB

Mannik Smith GROUP
TECHNICAL SKILL. CREATIVE SPIRIT.
www.MannikSmithGroup.com

PREPARED FOR:
HFPL DUBLIN, LLC
4592 ULMERTON RD, SUITE 100
CLEARWATER, FL 33762

PRELIMINARY PLAN FOR
THE SHOPS AT HAWK'S LANDING
POST ROAD, PLAIN CITY, OH 43064

EROSION & SEDIMENT CONTROL PLN

\\mspfiler\MSGData\Projects\Projects A-E\B17400002\CAD\SHEETS\B17400002_ESCP & DETAILS.dwg Last saved 5/23/2024 11:29 AM by ABakere, plotted 5/23/2024 1:25 PM

SITE NARRATIVE

PLAN DESIGNER:	THE MANNIK & SMITH GROUP, INC. 1160 DUBLIN ROAD, SUITE 100 COLUMBUS, OHIO 43215 CONTACT: KYLE J. WRENTMORE PHONE: (614) 441-4222 EMAIL: KWRENTMORE@MANNIKSMITHGROUP.COM
OWNER/DEVELOPER:	BOOS DEVELOPMENT GROUP, INC. 410 PARK PLACE BLVD, SUITE 100 CLEARWATER, FLORIDA 33759 CONTACT: CURT NEEL PHONE: (727) 669-2900 EMAIL: CNEEL@BOOSDEVELOPMENT.COM
SITE CONTACT:	CONTACT: KYLE J. WRENTMORE PHONE: (614) 441-4222 EMAIL: KWRENTMORE@MANNIKSMITHGROUP.COM
PROJECT DESCRIPTION:	SITE IS EXISTING AGRICULTURAL LAND CONSISTS OF 3 LOTS, ROADWAYS, UTILITIES CONNECTIONS AND DETENTION AREAS.
ADJACENT AREAS:	THE SITE IS BOUNDED BY US33 (WEST), VACANT LAND (EAST, NORTH), AND SR-161 (SOUTH).
PROJECT SITE AREA:	SITE AREA: 10.18 AC TOTAL DISTURBED AREA: 1.80 AC PRE-DEVELOPED IMPERVIOUS AREA / % : 0.00 AC / 0.00% POST-DEVELOPED IMPERVIOUS AREA / % : 0.67 AC / 0.37%
RUNOFF COEFFICIENTS:	PRE-DEVELOPED: TBD POST-DEVELOPED: TBD
EXISTING SITE CONDITIONS:	AGRICULTURAL LANDS
SOILS:	BROOKSTON SILTY CLAY LOAM (Bs), FINE TEXTURE, 0 TO 2 PERCENT SLOPES, HSG D CROSBY SILT LOAM (CrA), SOUTHERN OHIO TILL PLAIN, 0 TO 2 PERCENT SLOPES, HSG D
RECEIVING STREAM/ SURFACE WATER:	SOUTH FORK INDIAN RUN
EROSION AND SEDIMENT CONTROL MEASURES:	INLET PROTECTION SEDIMENT BASIN CONSTRUCTION ENTRANCE SEDIMENT FENCE
PERMANENT STABILIZATION:	THE SITE WILL BE STABILIZED BY USE OF SEEDING OR SODDING IN GRASS AREAS.
POST-CONSTRUCTION STORM WATER MANAGEMENT:	UNDERGROUND DETENTION FACILITY TO SERVE THE NEW ROADWAY INFRASTRUCTURE.
CONSTRUCTION SEQUENCE:	1. ESTABLISH A DESIGNATED CONSTRUCTION ENTRANCE/EXIT 2. INSTALL PERIMETER SEDIMENT FENCE 3. INSTALL TEMPORARY SEDIMENT CONTROL MEASURES 4. CLEAR THE EXISTING VEGETATION AND COMMENCE ROUGH GRADING 5. INSTALL PERMANENT STORM SEWER AND INLET PROTECTION 6. CONSTRUCT CURBS, PARKING, AND DRIVES 7. BACKFILL CURBS, FINE GRADE, AND STABILIZE DISTURBED AREAS 8. INSTALL REMAINING UTILITIES AND SEWERS 9. UPON PERMANENT STABILIZATION OF THE SITE, CONTACT THE CITY OF SPRINGFIELD TO REQUEST A SITE ASSESSMENT PRIOR TO REMOVING TEMPORARY SEDIMENT CONTROL MEASURES 10. REMOVE SEDIMENT FENCE
OEPA NPDES PERMIT:	TBD

EROSION CONTROL GENERAL NOTES:

IT IS THE CONTRACTORS RESPONSIBILITY TO MAINTAIN THE SEDIMENTATION AND EROSION CONTROL FEATURES ON THIS PROJECT. ANY SEDIMENT OR DEBRIS WHICH HAS REDUCED THE EFFICIENCY OF A CONTROL SHALL BE REMOVED IMMEDIATELY. SHOULD A STRUCTURE OR FEATURE BECOME DAMAGED, THE CONTRACTOR SHALL REPAIR OR REPLACE AT NO ADDITIONAL COST TO THE OWNER.

NOT ALL EROSION CONTROL MEASURES SHOWN WILL BE IN USE AT THE SAME TIME. PHASING SHALL BE DETERMINED BY THE CONTRACTOR AND EROSION CONTROL DEVICES SHALL BE MODIFIED ACCORDINGLY

STREET CLEANING (ON AND AS-NEEDED BASIS) IS REQUIRED THROUGH THE DURATION OF THIS CONSTRUCTION PROJECT. THIS INCLUDES SWEEPING, POWER CLEANING, AND, IF NECESSARY, MANUAL REMOVAL OF DIRT OR MUD IN THE STREET GUTTERS.

THIS PLAN MUST BE POSTED ON-SITE. A COPY OF THE SWPPP PLAN AND THE APPROVED EPA STORMWATER PERMIT (WITH THE SITE-SPECIFIC NOI NUMBER) SHALL BE KEPT ON-SITE AT ALL TIMES.

DIRECT DISCHARGE OF SEDIMENT LADEN WATER TO THE CITY'S SEWER SYSTEM OR A RECEIVING STREAM IS A VIOLATION OF OHIO EPA AND CITY OF SPRINGFIELD REGULATIONS. THE CONTRACTOR WILL BE HELD LIABLE FOR THE VIOLATION AND SUBSEQUENT FINES.

ALL INLETS RECEIVING FLOW FROM RUNOFF, PUMPING ACTIVITIES, OR OTHER DIRECT DISCHARGES SHALL BE FITTED WITH AN INLET PROTECTION DEVICE THAT IS PROPERLY SIZED AND SECURED TO REDUCE THE DISCHARGE OF SEDIMENT INTO THE STORM SEWER SYSTEM AND RECEIVING STREAM. INLET PROTECTION IS REQUIRED ON ALL INLETS RECEIVING DISCHARGE REGARDLESS OF WHETHER OR NOT-THE INLET IS TRIBUTARY TO ANY DOWNSTREAM EROSION AND SEDIMENT CONTROLS.

ALL EROSION AND SEDIMENT CONTROL PRACTICES ARE SUBJECT TO FIELD MODIFICATION AT THE DISCRETION OF THE CITY OF SPRINGFIELD AND/OR THE OEPA.

TEMPORARY AND PERMANENT SEEDING

THE LIMITS OF SEEDING AND MULCHING ARE ASSUMED TO BE 5'-0" OUTSIDE THE WORK LIMITS. ALL AREAS NOT DESIGNATED TO BE SEEDED SHALL REMAIN UNDER NATURAL GROUND COVER. THOSE AREAS DISTURBED OUTSIDE THE SEEDING LIMITS SHALL BE SEEDED AND MULCHED AT THE CONTRACTOR'S EXPENSE.

TEMPORARY SEEDING: ANY AREA WHICH WILL BE LEFT DORMANT (UNDISTURBED) FOR MORE THAN 21 DAYS SHALL BE SEEDED WITHIN 7 DAYS OF TERMINATED WORK. DISTURBED AREAS WITHIN 50 FEET OF A STREAM, FIRST ORDER OR LARGER, SHALL BE STABILIZED WITHIN 2 DAYS OF INACTIVITY. TEMPORARY SEEDING CONSISTS OF SEEDBED PREPARATION AND APPLICATION OF SEED, FERTILIZER, AND WATER. SOIL TEST IS RECOMMENDED TO DETERMINE PROPER APPLICATION RATE OF FERTILIZER AND IF LIME IS NECESSARY.

FERTILIZER: 12-12-12	12 LB / 1000 SQ. FT.
STRAW MULCH	2 TONS / ACRE
WATER	300 GAL. / 1000 SQ. FT.

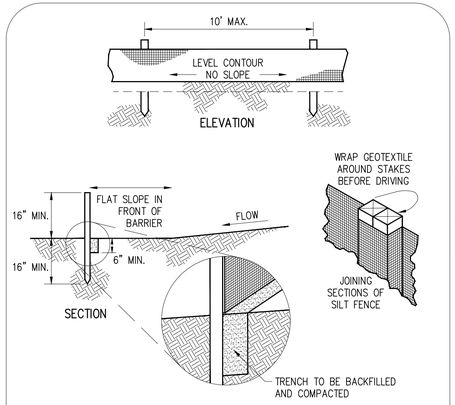

SPECIFICATIONS FOR SILT FENCE:

1. SILT FENCE SHALL BE CONSTRUCTED BEFORE UPSLOPE LAND DISTURBANCE BEGINS.
2. ALL SILT FENCE SHALL BE PLACED AS CLOSE TO THE CONTOUR AS POSSIBLE SO THAT WATER WILL NOT CONCENTRATE AT LOW POINTS IN THE FENCE AND SO THAT SMALL SWALES OR DEPRESSIONS THAT MAY CARRY SMALL CONCENTRATED FLOWS TO THE SILT FENCE ARE DISSIPATED ALONG ITS LENGTH.
3. ENDS OF THE SILT FENCES SHALL BE BROUGHT UPSLOPE SLIGHTLY SO THAT WATER PONDED BY THE SILT FENCE WILL BE PREVENTED FROM FLOWING AROUND THE ENDS.
4. SILT FENCE SHALL BE PLACED ON THE FLATTEST AREA AVAILABLE.
5. WHERE POSSIBLE, VEGETATION SHALL BE PRESERVED FOR 5 FEET (OR AS MUCH AS POSSIBLE) UPSLOPE FROM THE SILT FENCE. IF VEGETATION IS REMOVED, IT SHALL BE REESTABLISHED WITHIN 7 DAYS FROM THE INSTALLATION OF THE SILT FENCE.
6. THE HEIGHT OF THE SILT FENCE SHALL BE A MINIMUM OF 16 INCHES ABOVE THE ORIGINAL GROUND SURFACE.
7. THE SILT FENCE SHALL BE PLACED IN AN EXCAVATED OR SLICED TRENCH CUT A MINIMUM OF 6 INCHES DEEP. THE TRENCH SHALL BE MADE WITH A TRENCHER, CABLE LAYING MACHINE, SLICING MACHINE, OR OTHER SUITABLE DEVICE THAT WILL ENSURE AN ADEQUATELY UNIFORM TRENCH DEPTH.
8. THE SILT FENCE SHALL BE PLACED WITH THE STAKES ON THE DOWNSLOPE SIDE OF THE GEOTEXTILE. A MINIMUM OF 8 INCHES OF GEOTEXTILE MUST BE BELOW THE GROUND SURFACE. EXCESS MATERIAL SHALL LAY ON THE BOTTOM OF THE 6-INCH DEEP TRENCH. THE TRENCH SHALL BE BACKFILLED AND COMPACTED ON BOTH SIDES OF THE FABRIC.
9. SEAMS BETWEEN SECTIONS OF SILT FENCE SHALL BE SPLICED TOGETHER ONLY AT A SUPPORT POST WITH A MINIMUM 6-IN. OVERLAP PRIOR TO DRIVING INTO THE GROUND.
10. MAINTENANCE-SILT FENCE SHALL ALLOW RUNOFF TO PASS ONLY AS DIFFUSE FLOW THROUGH THE GEOTEXTILE. IF RUNOFF OVERTOPS THE SILT FENCE, FLOWS UNDER THE FABRIC OR AROUND THE FENCE ENDS, OR IN ANY OTHER WAY ALLOWS A CONCENTRATED FLOW DISCHARGE, ONE OF THE FOLLOWING SHALL BE PERFORMED, AS APPROPRIATE: 1)THE LAYOUT OF THE SILT FENCE SHALL BE CHANGED, 2)ACCUMULATED SEDIMENT SHALL BE REMOVED, OR 3)OTHER PRACTICES SHALL BE INSTALLED.

    SEDIMENT DEPOSITS SHALL BE ROUTINELY REMOVED WHEN THE DEPOSIT REACHES APPROXIMATELY ONE-HALF OF THE HEIGHT OF THE SILT FENCE.

    SILT FENCES SHALL BE INSPECTED AFTER EACH RAINFALL AND AT LEAST DAILY DURING A PROLONGED RAINFALL. THE LOCATION OF EXISTING SILT FENCE SHALL BE REVIEWED DAILY TO ENSURE ITS PROPER LOCATION AND EFFECTIVENESS. IF DAMAGED, THE SILT FENCE SHALL BE REPAIRED IMMEDIATELY.

CRITERIA FOR SILT FENCE MATERIALS

1. FENCE POST - THE LENGTH SHALL BE A MINIMUM OF 32 INCHES. WOOD POSTS WILL BE 2-BY-2-IN. NOMINAL DIMENSIONED HARDWOOD OF SOUND QUALITY. THEY SHALL BE FREE OF KNOTS, SPLITS AND OTHER VISIBLE IMPERFECTIONS, THAT WILL WEAKEN THE POSTS. THE MAXIMUM SPACING BETWEEN POSTS SHALL BE 10 FT. POSTS SHALL BE DRIVEN A MINIMUM 16 INCHES INTO THE GROUND, WHERE POSSIBLE. IF NOT POSSIBLE, THE POSTS SHALL BE ADEQUATELY SECURED TO PREVENT OVERTURNING OF THE FENCE DUE TO SEDIMENT/WATER LOADING.
2. SILT FENCE FABRIC - SEE CHART BELOW.

FABRIC PROPERTIES	VALUES	TEST METHOD
Minimum Tensile Strength	120 lbs (535 N)	ASTM D 4632
Maximum Elongation at 60 lbs	50%	ASTM D 4632
Minimum Puncture Strength	50 lbs (220 N)	ASTM D 4833
Minimum Tear Strength	40 lbs (180 N)	ASTM D 4533
Apparent Opening Size	0.84 mm	ASTM D 4751
Minimum Permittivity	$1x10^{-2}$ sec^{-1}	ASTM D 4491
UV Exposure Strength Retention	70%	ASTM G 4355

* NOTE: THE USE OF STRAW WATTLES HAS PROVEN TO BE A VERSATILE AND EFFECTIVE ESC BMP, ESPECIALLY IN RESIDENTIAL SETTINGS. STRAW WATTLES MAY BE SUBSTITUTED FOR SILT FENCE IN LINEAR INSTALLATIONS.

SEDIMENT FENCE BARRIER

NOT TO SCALE

TEMPORARY SEEDING			
SEEDING DATES	SPECIES	LB/1000 SQ. FT.	PER ACRE
MARCH 1 TO NOVEMBER 1	OATS	3	4 BUSHEL
	TALL FESCUE	1	40 LB
	ANNUAL RYEGRASS	1	40 LB
	PERINNEAL RYEGRASS	1	40 LB
	TALL FESCUE	1	40 LB
	ANNUAL RYEGRASS	1	40 LB
NOVEMBER 1 TO MARCH 1	USE MULCH ONLY, SODDING PRACTICES, OR DORMANT SEEDING		
NOTE: OTHER APPROVED SEED SPECIES MAY BE SUBSTITUTED			

PERMANENT SEEDING: ANY AREA THAT IS AT FINAL GRADE SHALL BE SEEDED WITHIN 7 DAYS OF TERMINATED WORK. PERMANENT SEEDING CONSISTS OF SEEDBED PREPARATION AND APPLICATION OF SEED, FERTILIZER, AND WATER. SOIL TEST IS RECOMMENDED TO DETERMINE PROPER APPLICATION RATE OF FERTILIZER AND IF LIME IS NECESSARY. IDEAL CONDITIONS FOR PERMANENT SEEDING IS MARCH 1-MAY 31 AND AUGUST 1-SEPTEMBER 30.

PERMANENT SEEDING			
SEED MIX	SEEDING RATE		NOTES
	LB / ACRE	LB/1000 SQ. FT.	
GENERAL USE			
CREEPING RED FESCUE	20 - 40	1/2 - 1	
DOMESTIC RYEGRASS	10 - 20	1/4 - 1/2	
KENTUCKY BLUEGRASS	10 - 20	1/4 - 1/2	
TALL FESCUE	40	1	
DWARF FESCUE	40	1	
NOTE: OTHER APPROVED SEED SPECIES MAY BE SUBSTITUTED			

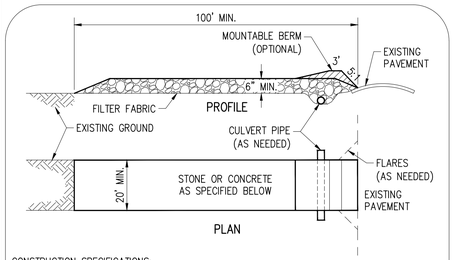

CONSTRUCTION SPECIFICATIONS:

1. STONE SIZE - USE 2" STONE OR RECLAIMED OR RECYCLED CONCRETE EQUIVALENT.
2. LENGTH - A MINIMUM OF 100'
3. THICKNESS - NOT LESS THAN SIX (6) INCHES.
4. WIDTH - TWENTY (20) FEET MINIMUM BUT NOT LESS THAN THE FULL WIDTH AT POINTS WHERE INGRESS OR EGRESS OCCURS.
5. FILTER FABRIC - WILL BE PLACED OVER THE ENTIRE AREA PRIOR TO PLACING THE STONE.
6. SURFACE WATER - ALL SURFACE WATER FLOWING OR DIVERTED TOWARD CONSTRUCTION ENTRANCES SHALL BE PIPED ACROSS THE ENTRANCE. IF PIPING IS IMPRACTICAL, A MOUNTABLE BERM WITH 5:1 SLOPES SHALL BE PERMITTED. COST OF PIPE SHALL BE INCLUDED IN THE PRICE BID FOR THE STABILIZED CONSTRUCTION ENTRANCE.
7. MAINTENANCE - THE ENTRANCE SHALL BE MAINTAINED IN A CONDITION WHICH WILL PROTECT THE PUBLIC RIGHT-OF-WAY. THIS MAY REQUIRE PERIODIC TOP DRESSING WITH ADDITIONAL STONE AS CONDITIONS DEMAND AND REPAIR AND/OR CLEANOUT OF ANY MEASURES USED TO TRAP SEDIMENT. ALL SEDIMENT SPILLED, DROPPED, WASHED, OR TRACKED ONTO PUBLIC RIGHT-OF-WAY MUST BE REMOVED IMMEDIATELY.
8. WASHING - WHEELS SHALL BE CLEANED TO REMOVE SEDIMENT PRIOR TO ENTRANCE INTO PUBLIC RIGHT-OF-WAY. WHEN WASHING IS REQUIRED, IT SHALL BE DONE ON AN AREA STABILIZED WITH STONE AND WHICH DRAINS INTO AN APPROVED SEDIMENT TRAPPING DEVICE.
9. PERIODIC INSPECTION AND NEEDED MAINTENANCE SHALL BE PROVIDED AFTER EACH RAIN.

STABILIZED CONSTRUCTION ENTRANCE

NOT TO SCALE

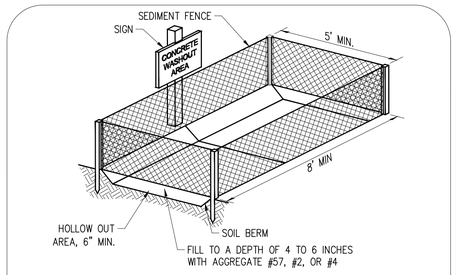

NOTES:

1. CONCRETE TRUCKS SHALL UTILIZE AREAS TO WASH OUT TRUCK CHUTES
2. ACCUMULATED CONCRETE SHALL BE REMOVED FROM THE SITE AND DISPOSED OF PROPERLY
3. THE USE OF PORTABLE CONCRETE WASHOUT UNITS IS APPROVED (AND ENCOURAGED)

CONCRETE WASHOUT AREA

NOT TO SCALE

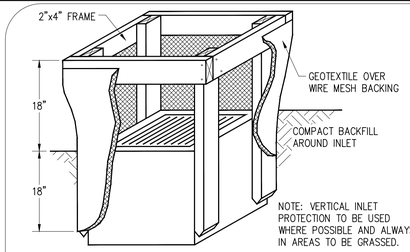

CONSTRUCTION SPECIFICATIONS:

1. INLET PROTECTION SHALL BE CONSTRUCTED EITHER BEFORE UPSLOPE LAND DISTURBANCE BEGINS OR BEFORE THE INLET BECOMES FUNCTIONAL.
2. THE EARTH AROUND THE INLET SHALL BE EXCAVATED COMPLETELY TO A DEPTH AT LEAST 18 INCHES.
3. THE WOODEN FRAME SHALL BE CONSTRUCTED OF 2-INCH BY 4-INCH CONSTRUCTION GRADE LUMBER. THE 2-INCH BY 4-INCH POSTS SHALL BE DRIVEN ONE (1) FT. INTO THE GROUND AT FOUR CORNERS OF THE INLET AND THE TOP PORTION OF 2-INCH BY 4-INCH FRAME ASSEMBLED USING THE OVERLAP JOINT SHOWN. THE TOP OF THE FRAME SHALL BE AT LEAST 6 INCHES BELOW ADJACENT ROADS IF PONDED WATER WILL POSE A SAFETY HAZARD TO TRAFFIC.
4. WIRE MESH SHALL BE OF SUFFICIENT STRENGTH TO SUPPORT FABRIC WITH WATER FULLY IMPOUNDED AGAINST IT. IT SHALL BE STRETCHED TIGHTLY AROUND THE FRAME AND FASTENED SECURELY TO THE FRAME.
5. GEOTEXTILE MATERIAL SHALL HAVE AN EQUIVALENT OPENING SIZE OF 20-40 SIEVE AND BE RESISTANT TO SUNLIGHT. IT SHALL BE STRETCHED TIGHTLY AROUND THE FRAME AND FASTENED SECURELY. IT SHALL EXTEND FROM THE TOP OF THE FRAME TO 18 INCHES BELOW THE INLET NOTCH ELEVATION. THE GEOTEXTILE SHALL OVERLAP ACROSS ONE SIDE OF THE INLET SO THE ENDS OF THE CLOTH ARE NOT FASTENED TO THE SAME POST.
6. BACKFILL SHALL BE PLACED AROUND THE INLET IN COMPACTED 6-INCH LAYERS UNTIL THE EARTH IS EVEN WITH NOTCH ELEVATION ON ENDS AND TOP ELEVATION ON SIDES.
7. A COMPACTED EARTH DIKE OR CHECK DAM SHALL BE CONSTRUCTED IN THE DITCH LINE BELOW THE INLET IF THE INLET IS NOT IN A DEPRESSION. THE TOP OF THE DIKE SHALL BE AT LEAST 6 INCHES HIGHER THAN THE TOP OF THE FRAME.

FILTER FABRIC INLET PROTECTION

NOT TO SCALE

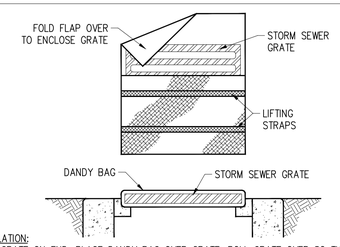

INSTALLATION:
STAND GRATE ON END. PLACE DANDY BAG OVER GRATE. ROLL GRATE OVER SO THAT OPEN END IS UP. PULL UP SLACK. TUCK IN FLAP. BE SURE END OF GRATE IS COMPLETELY COVERED BY FLAP OR DANDY BAG WILL NOT FIT PROPERLY. HOLDING HANDLES, CAREFULLY PLACE DANDY BAG WITH GRATE INSERTED INTO THE CATCH BASIN FRAME SO THAT THE RED DOT ON THE TOP OF THE DANDY BAG IS VISIBLE.

MAINTENANCE:
USING A STIFF BRISTLE BROOM OR SQUARE POINT SHOVEL, REMOVE SILT AND OTHER DEBRIS OFF SURFACE AFTER EACH EVENT.

INLET PROTECTION - DANDY BAG™

NOT TO SCALE

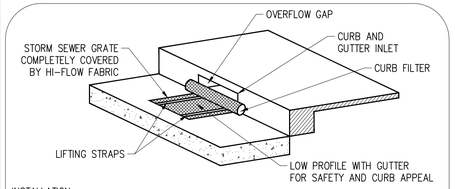

INSTALLATION:
STAND GRATE ON END. SLIDE THE DANDY CURB BAG ON WITH DAM ON TOP OF THE GRATE. PULL ALL EXCESS DOWN. LAY UNIT ON ITS SIDE. CAREFULLY TUCK FLAP IN. PRESS VELCRO STRIPS TOGETHER. INSTALL THE UNIT MAKING SURE FRONT EDGE OF GRATE IS INSERTED IN FRAME FIRST THEN LOWER BACK INTO PLACE. PRESS VELCRO DOTS TOGETHER WHICH ARE LOCATED UNDER LIFTING STRAPS. THIS INSURES STRAPS REMAIN FLUSH WITH GUTTER.

MAINTENANCE:
USING A STIFF BRISTLE BROOM, SWEEP SILT AND OTHER DEBRIS OFF SURFACE AFTER EACH EVENT.

DANDY CURB BAG™

NOT TO SCALE

TEMPORARY SEDIMENT BASIN SIZING

UNDERGROUND DETENTION AREA	
DRAINAGE AREA	TBD
DISTURBED AREA	TBD
SEDIMENT STORAGE VOLUME REQUIRED (1000 CF/ACRE DISTURBED AREA)	TBD
SEDIMENT STORAGE VOLUME PROVIDED	TBD
DEWATERING VOLUME REQUIRED (1800 CF/ ACRE DRAINAGE AREA)	TBD
DEWATERING VOLUME PROVIDED	TBD

NO.	DATE	BY	DESCRIPTION

1160 DUBLIN ROAD
SUITE 100
COLUMBUS, OH 43215
TEL: 614.441.4222
FAX: 888.488.7340

PROJECT DATE: 05/23/24
PROJECT NO: B17400002
DRAWN BY: MAO
CHECKED BY: AAB

Mannik Smith GROUP
TECHNICAL SKILL. CREATIVE SPIRIT.
www.MannikSmithGroup.com

PREPARED FOR:
HFPL DUBLIN, LLC
4582 ILLMERTON RD, SUITE 100
CLEARWATER, FL 33762

PRELIMINARY PLAN FOR
THE SHOPS AT HAWK'S LANDING
POST ROAD, PLAIN CITY, OH 43064

EROSION & SEDIMENT CONTROL DETAILS

\\mngfiler\MSGData\Projects\Projects A-E\B17400002\CAD\SHEETS\B17400002_ESCP & DETAILS.dwg Last saved 5/23/2024 11:29 AM by ABakare, plotted 5/23/2024 1:26 PM

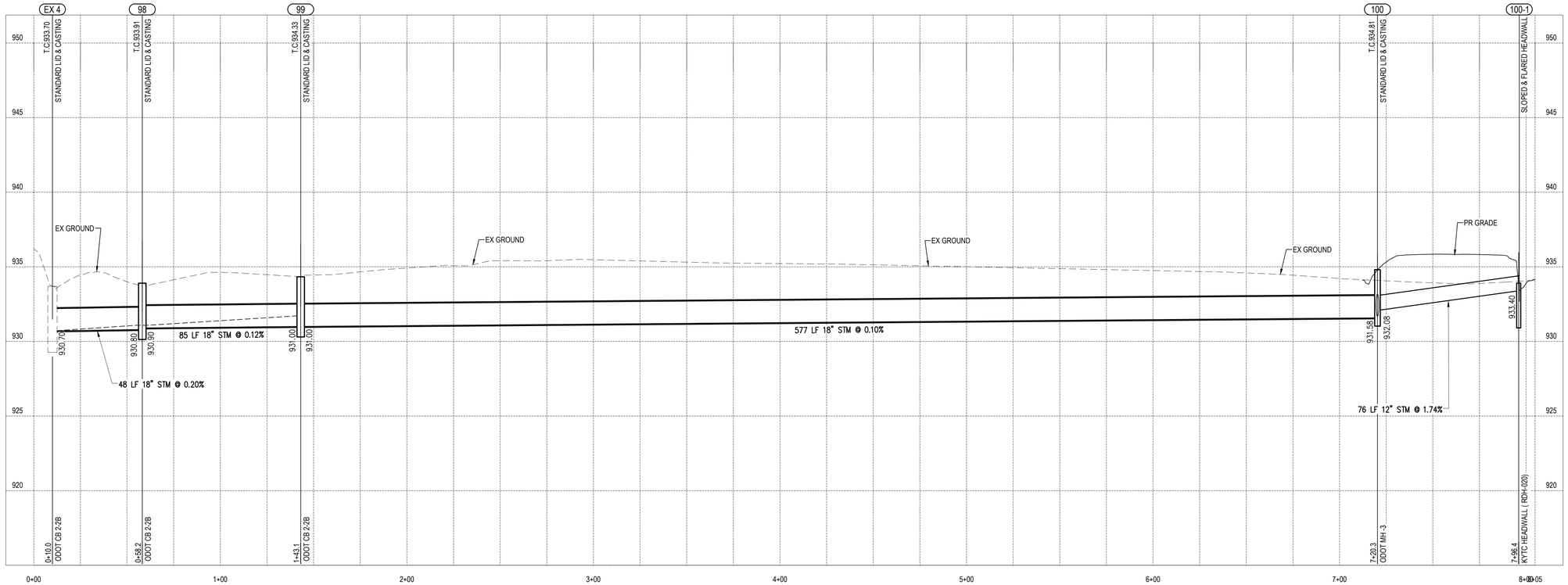

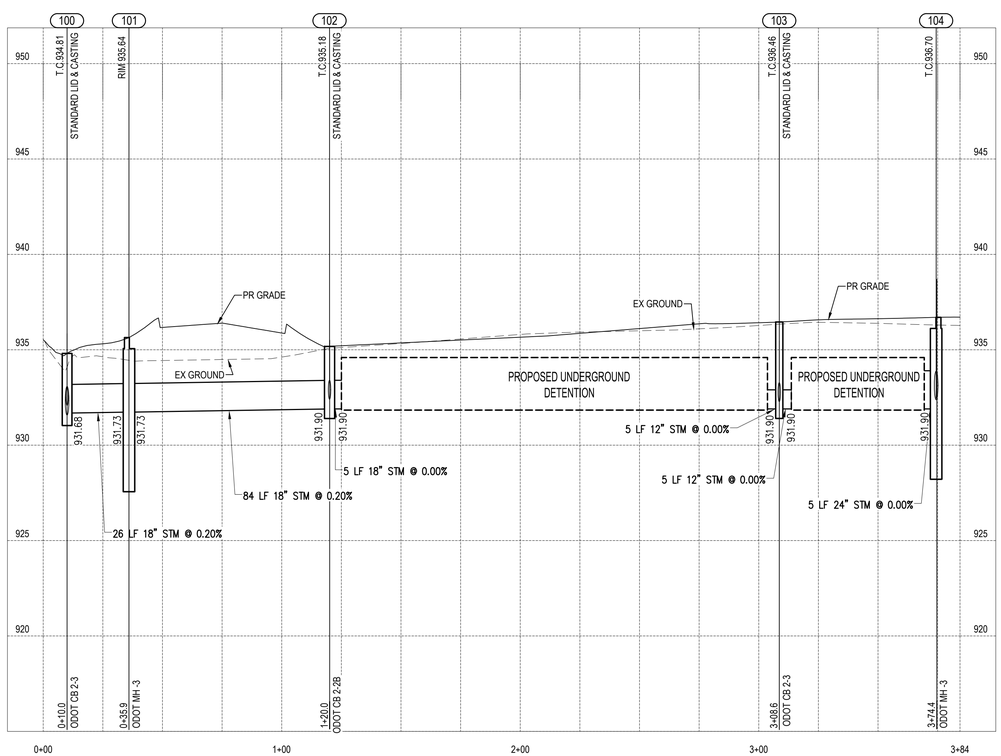

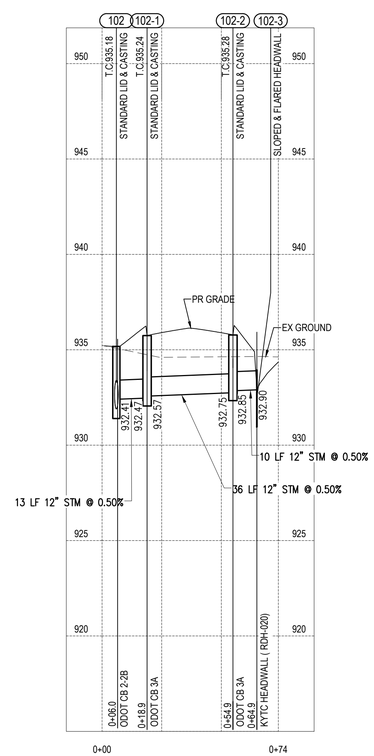

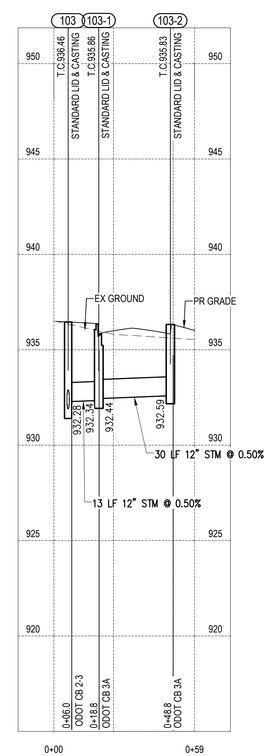

0 25 50 100

SCALE: 1 IN = 50 FT

NO.	DATE	BY	DESCRIPTION

1160 DUBLIN ROAD
SUITE 100
COLUMBUS, OH 43215
TEL: 614.441.4222
FAX: 888.488.7340

PROJECT DATE: 05/23/24
PROJECT NO: B17400.02
DRAWN BY: MAO
CHECKED BY: AAB

Mannik Smith GROUP
TECHNICAL SKILL. CREATIVE SPIRIT.
www.MannikSmithGroup.com

PREPARED FOR:
HFPL DUBLIN, LLC
4592 ULMERTON RD, SUITE 100
CLEARWATER, FL 33762

PRELIMINARY PLAN FOR
THE SHOPS AT HAWK'S LANDING
POST ROAD, PLAIN CITY, OH 43064

STORM PROFILES

\\mgfileserv\MSCdata\Projects\Projects A-E\B17400\02\CAD\SHEETS\B17400\02_STORM PROFILES.dwg Last saved 5/23/2024 11:34 AM by ABakare, plotted 5/23/2024 1:26 PM

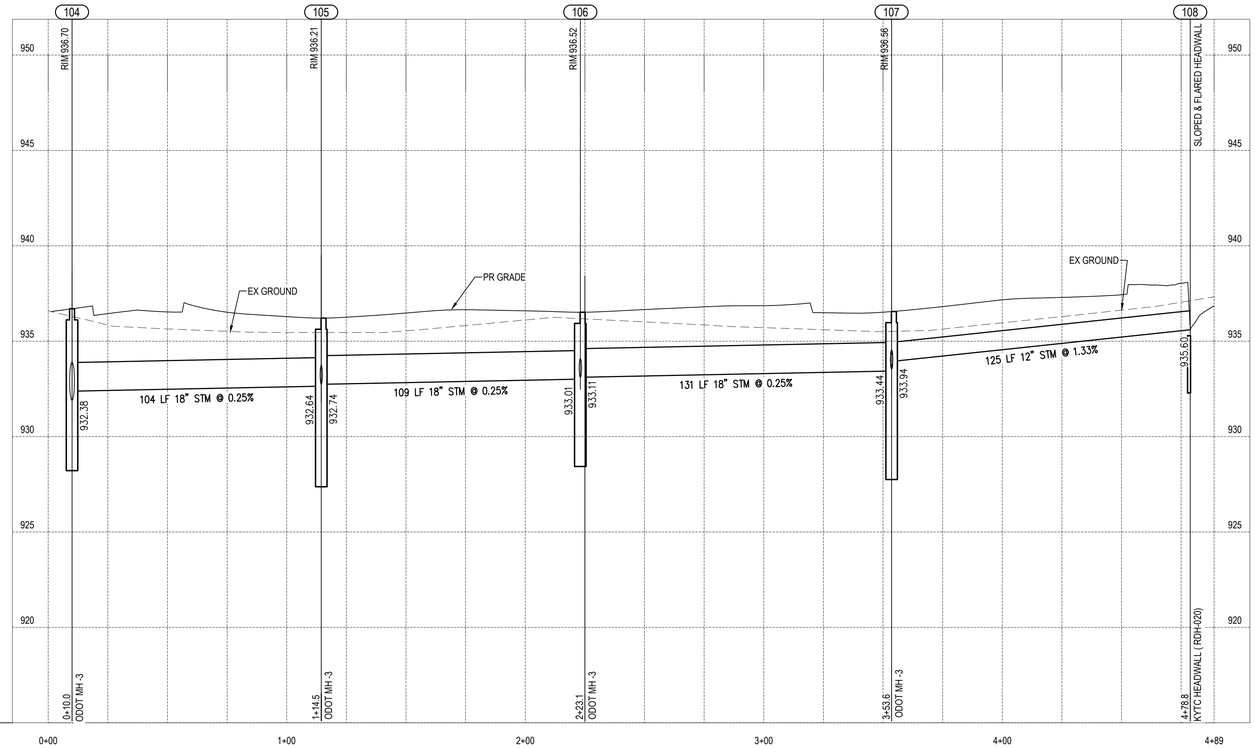

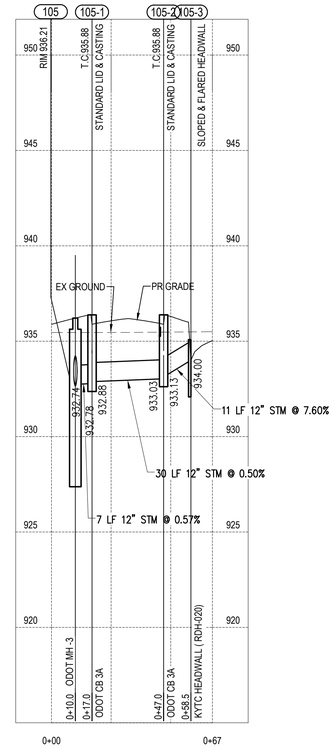

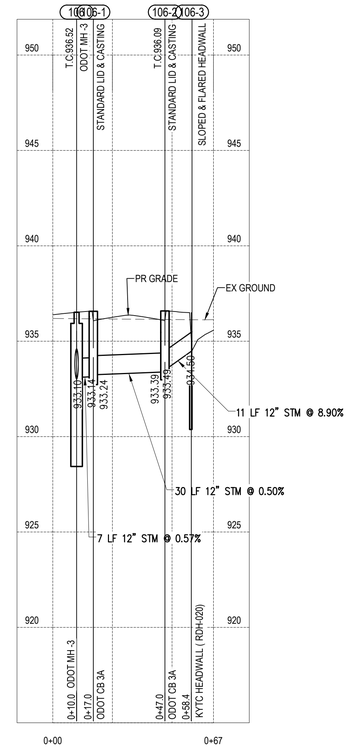

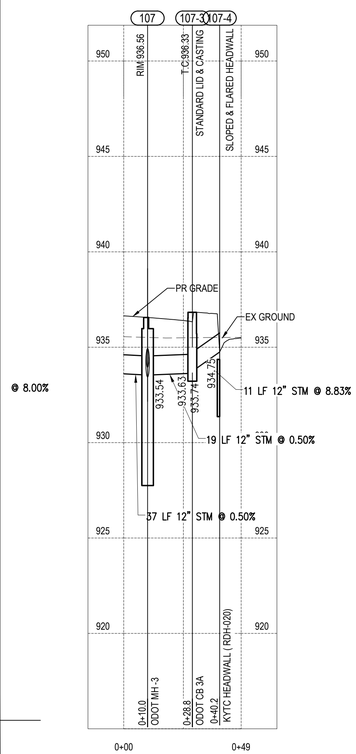

0 25 50 100
SCALE: 1 IN = 50 FT

NO.	DATE	BY	DESCRIPTION

1160 DUBLIN ROAD
SUITE 100
COLUMBUS, OH 43215
TEL: 614.441.4222
FAX: 888.488.7340

PROJECT DATE: 05/23/24
PROJECT NO: B17400.02
DRAWN BY: MAO
CHECKED BY: AAB

Mannik Smith GROUP
TECHNICAL SKILL. CREATIVE SPIRIT.
www.MannikSmithGroup.com

PREPARED FOR:
HFPL DUBLIN, LLC
4592 ULMERTON RD. SUITE 100
CLEARWATER, FL 33762

PRELIMINARY PLAN FOR
THE SHOPS AT HAWK'S LANDING
POST ROAD, PLAIN CITY, OH 43064

STORM PROFILES

\\magfileserv\MSCData\Projects\Projects A-E\B17400\02\CAD\SHEETS\B17400\02_STORM PROFILES.dwg Last saved 5/23/2024 11:34 AM by ABakare, plotted 5/23/2024 1:25 PM

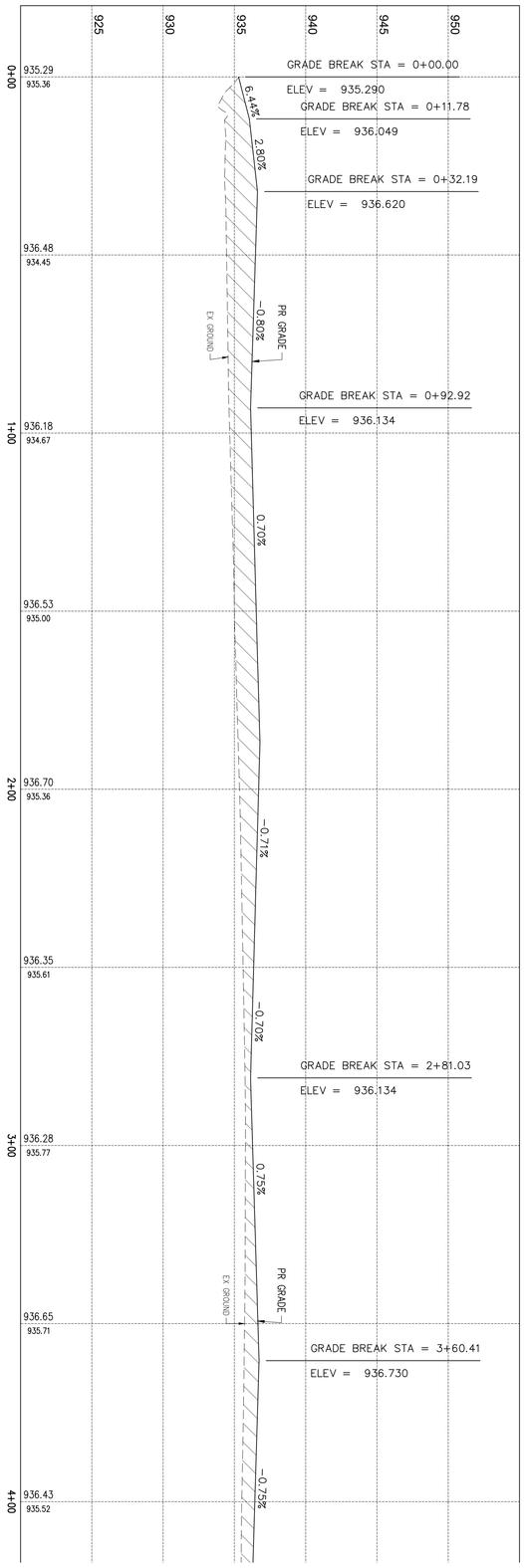

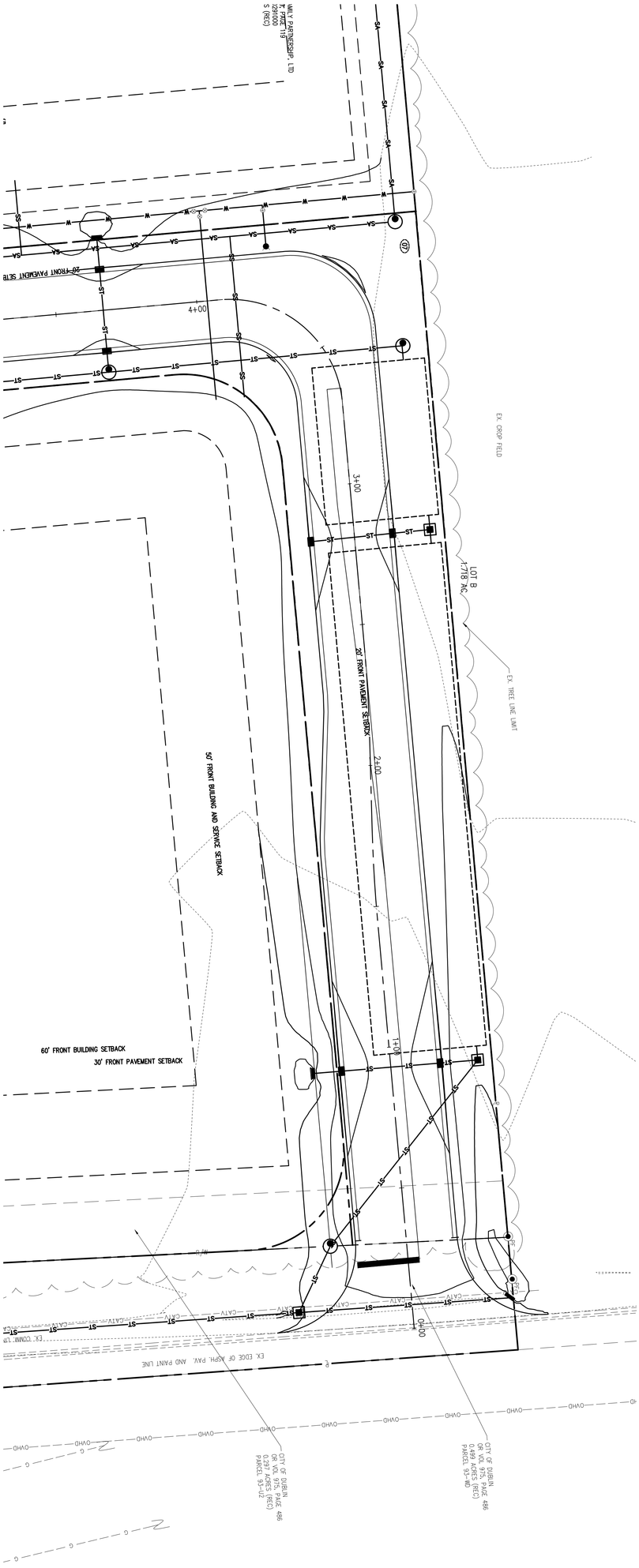

SCALE 1 IN = 20 FT

12	PLAN & PROFILE	PRELIMINARY PLAN FOR THE SHOPS AT HAWK'S LANDING POST ROAD, PLAIN CITY, OH 43064	PREPARED FOR: HFPL DUBLIN, LLC 4592 ULMERTON RD, SUITE 100 CLEARWATER, FL 33762	Mannik Smith GROUP www.MannikSmithGroup.com TECHNICAL SKILL. CREATIVE SPIRIT.	1160 DUBLIN ROAD SUITE 100 COLUMBUS, OH 43215 TEL: 614.441.4222 FAX: 888.488.7340 PROJECT DATE: 05/23/24 PROJECT NO: B1740002 DRAWN BY: MAO CHECKED BY: AAB	NO.	DATE	BY	DESCRIPTION

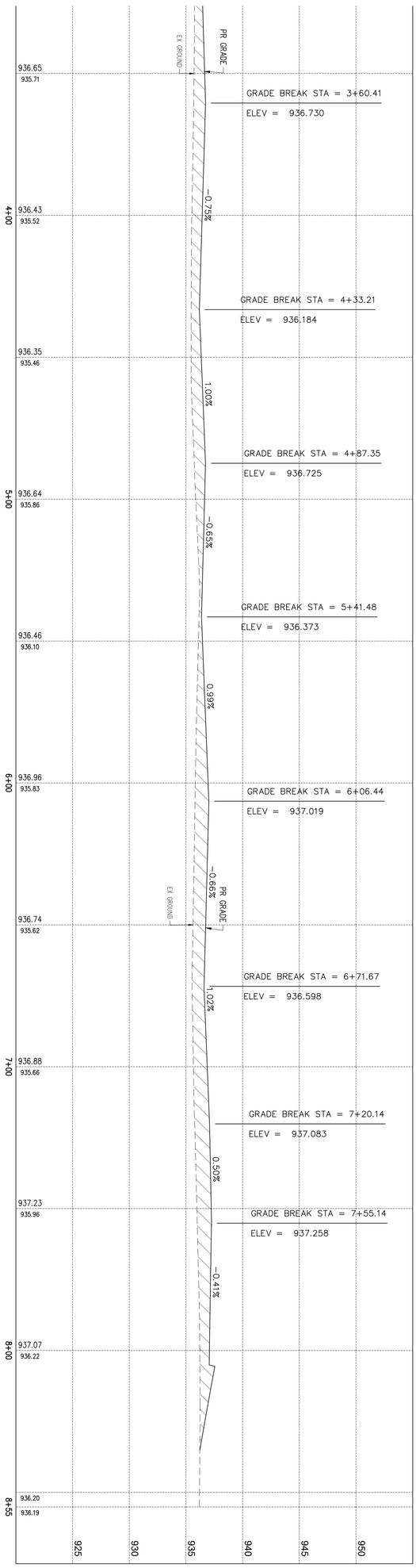

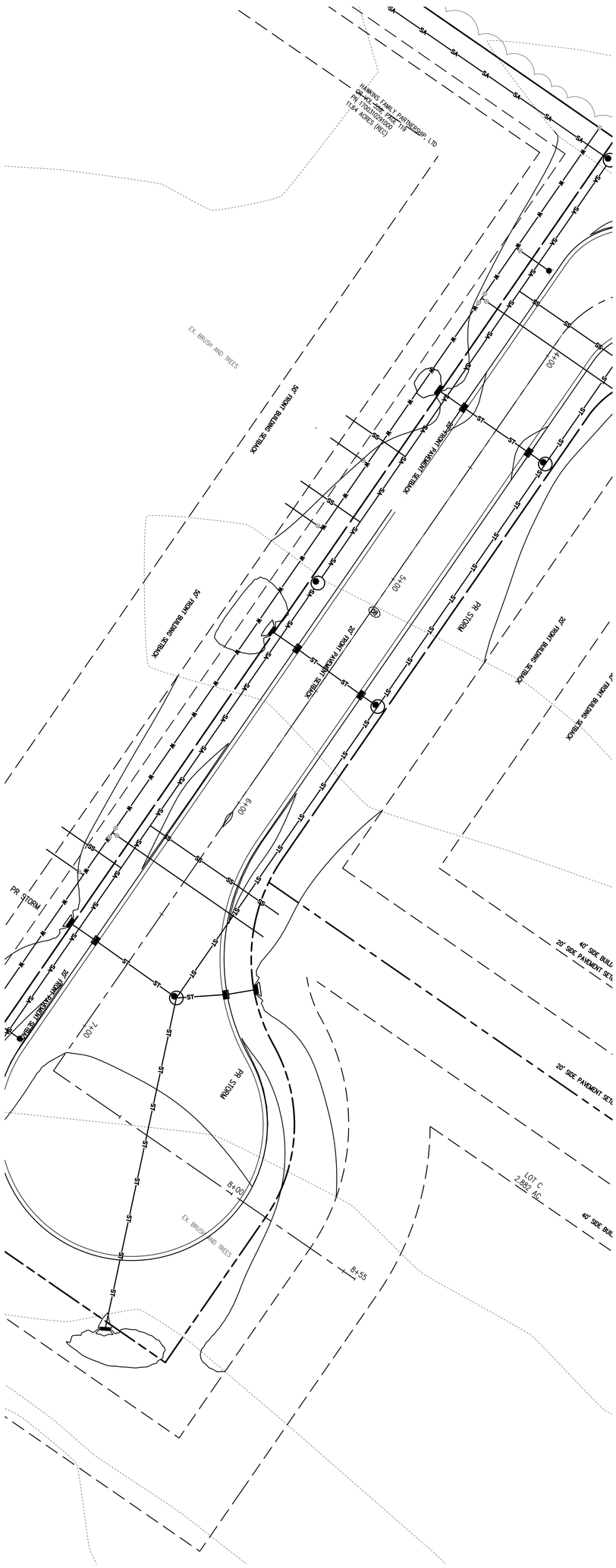

SCALE: 1 IN = 20 FT

13	PLAN & PROFILE	PRELIMINARY PLAN FOR THE SHOPS AT HAWK'S LANDING POST ROAD, PLAIN CITY, OH 43064	PREPARED FOR: HFPL DUBLIN, LLC 4592 ULMERTON RD, SUITE 100 CLEARWATER, FL 33762	Mannik Smith GROUP www.MannikSmithGroup.com TECHNICAL SKILL. CREATIVE SPIRIT.	1160 DUBLIN ROAD SUITE 100 COLUMBUS, OH 43215 TEL: 614.441.4222 FAX: 888.488.7340	NO.	DATE	BY	DESCRIPTION
					PROJECT DATE: 05/23/24 PROJECT NO: B1740002 DRAWN BY: MAO CHECKED BY: AAB				

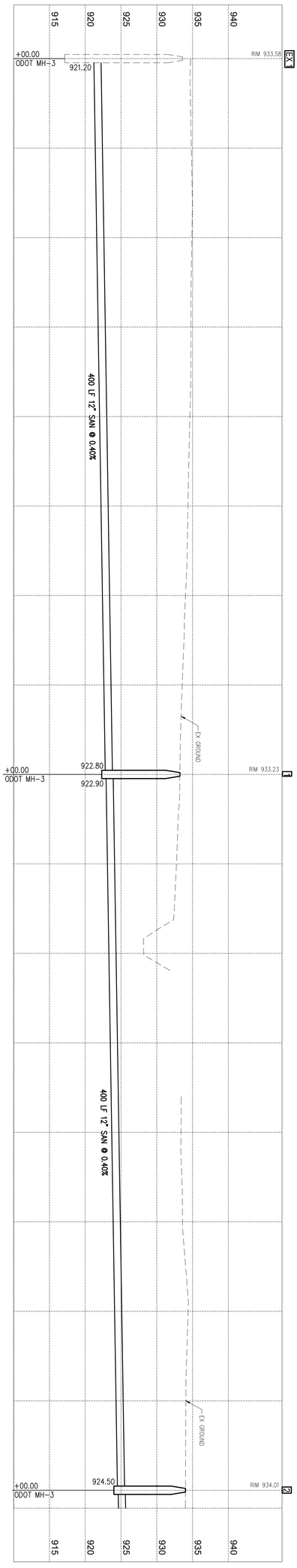

14	SANITARY PLAN & PROFILE	PRELIMINARY PLAN FOR THE SHOPS AT HAWK'S LANDING POST ROAD, PLAIN CITY, OH 43064	PREPARED FOR: HFPL DUBLIN, LLC 4592 ULMERTON RD, SUITE 100 CLEARWATER, FL 33762	Mannik Smith GROUP www.MannikSmithGroup.com TECHNICAL SKILL. CREATIVE SPIRIT.	1160 DUBLIN ROAD SUITE 100 COLUMBUS, OH 43215 TEL: 614.441.4222 FAX: 888.488.7340 PROJECT DATE: 05/23/24 PROJECT NO: B1740002 DRAWN BY: MAO CHECKED BY: AAB	NO.	DATE	BY	DESCRIPTION

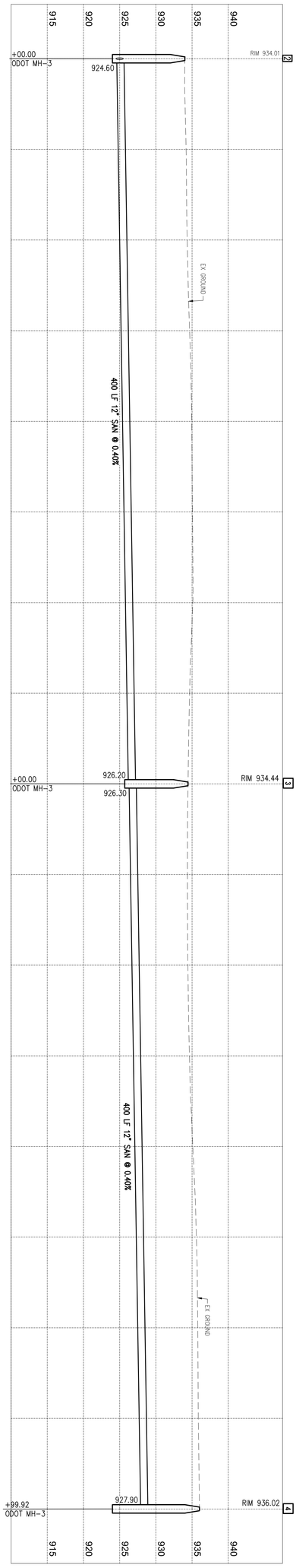

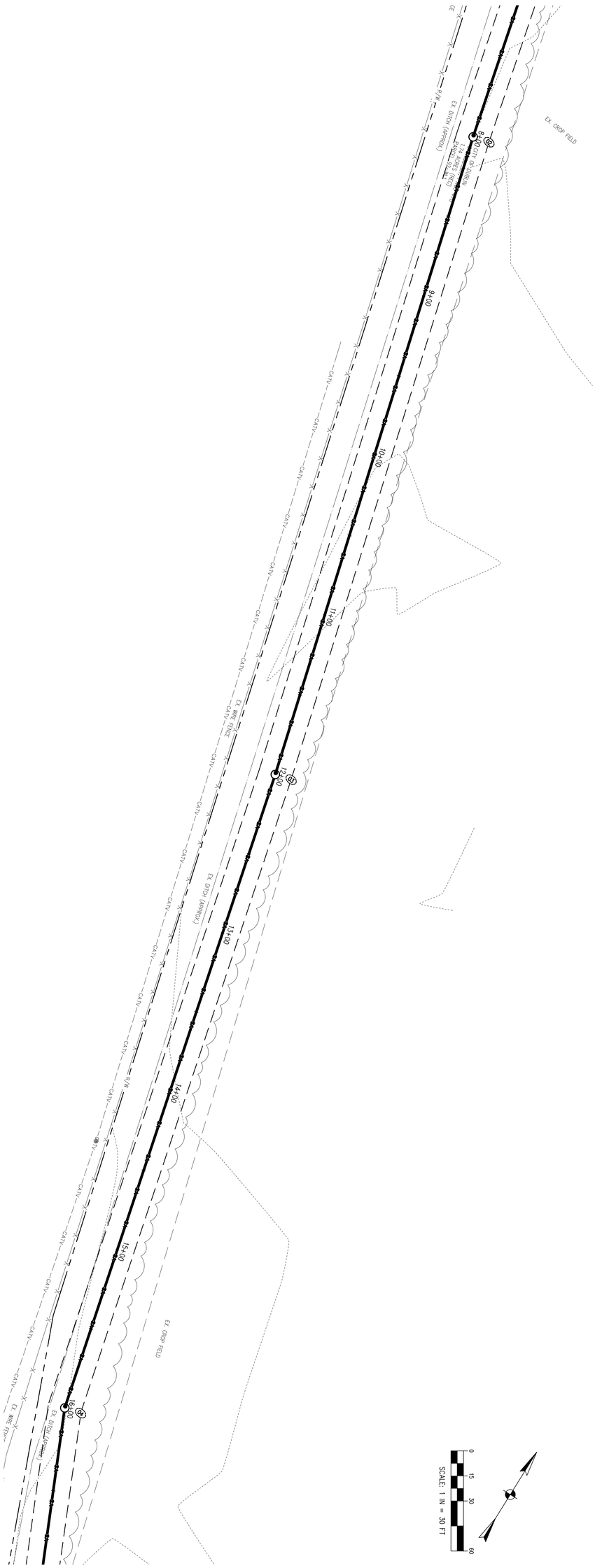

15	SANITARY PLAN & PROFILE	PRELIMINARY PLAN FOR THE SHOPS AT HAWK'S LANDING POST ROAD, PLAIN CITY, OH 43064	PREPARED FOR: HFPL DUBLIN, LLC 4592 ULMERTON RD, SUITE 100 CLEARWATER, FL 33762	Mannik Smith GROUP www.MannikSmithGroup.com TECHNICAL SKILL. CREATIVE SPIRIT.	1160 DUBLIN ROAD SUITE 100 COLUMBUS, OH 43215 TEL: 614.441.4222 FAX: 888.488.7340 PROJECT DATE: 05/23/24 PROJECT NO: B1740002 DRAWN BY: MAO CHECKED BY: AAB	NO.	DATE	BY	DESCRIPTION

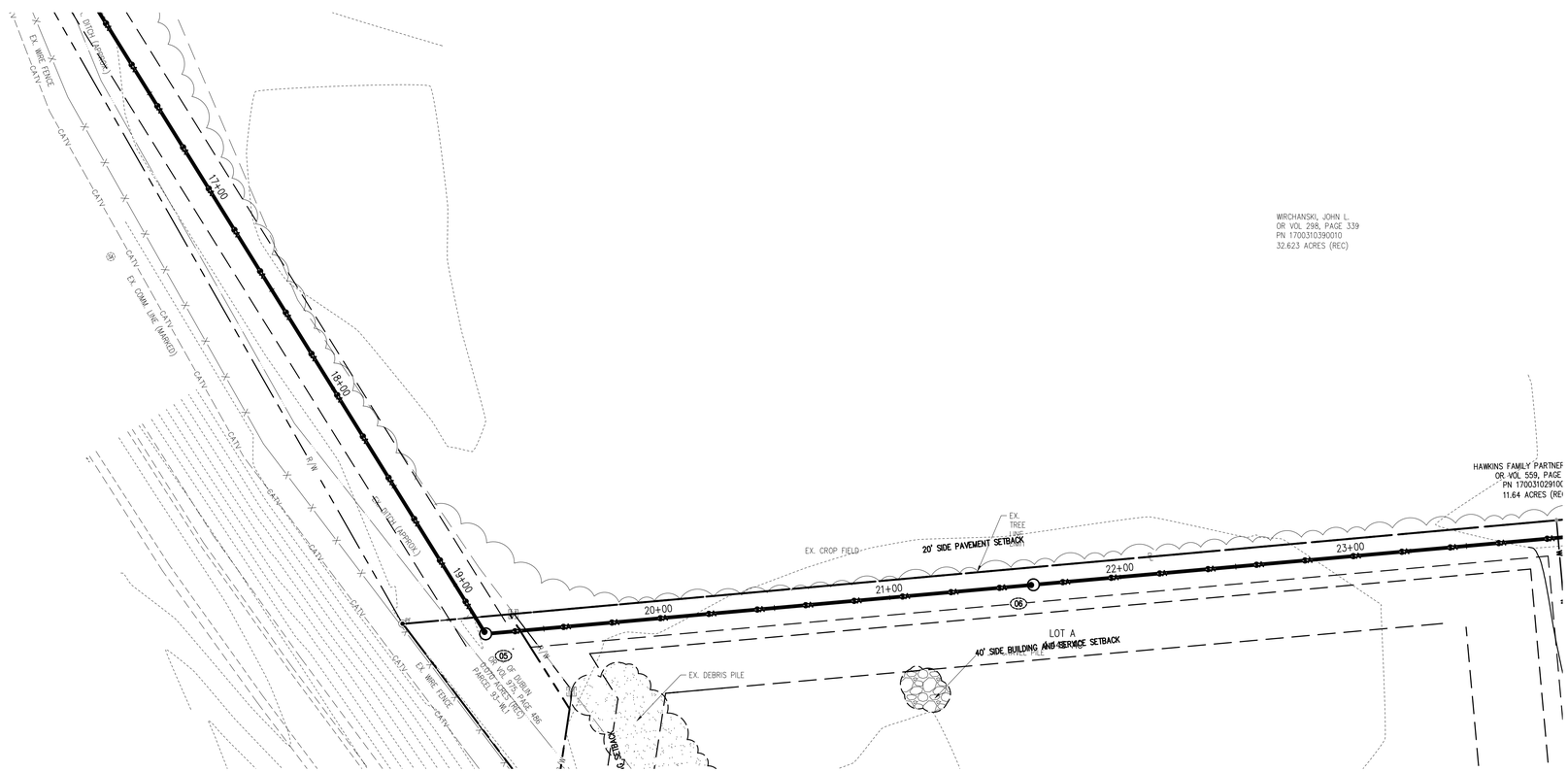

SCALE: 1 IN = 30 FT

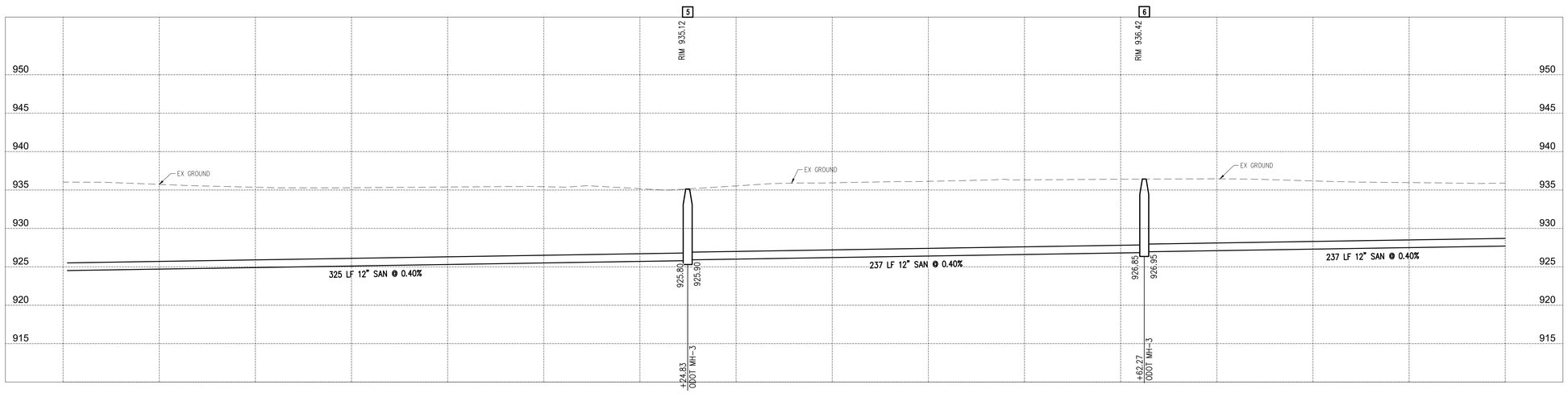

NO.	DATE	BY	DESCRIPTION

1160 DUBLIN ROAD
SUITE 100
COLUMBUS, OH 43215
TEL: 614.441.4222
FAX: 888.488.7340

PROJECT DATE: 05/23/24
PROJECT NO: B17400.02
DRAWN BY: MAO
CHECKED BY: AAB

Mannik Smith GROUP
TECHNICAL SKILL. CREATIVE SPIRIT.
www.MannikSmithGroup.com

PREPARED FOR:
HFPL DUBLIN, LLC
4592 ULMERTON RD, SUITE 100
CLEARWATER, FL 33762

PRELIMINARY PLAN FOR
THE SHOPS AT HAWK'S LANDING
POST ROAD, PLAIN CITY, OH 43064

SANITARY PLAN & PROFILE

\\mgfiler\MSGData\Projects\Projects A-E\B17400\02\CAD\SHEETS\B17400\02_SANITARY PLAN & PROFILE.dwg Last saved 5/23/2024 11:45 AM by ABakare, plotted 5/23/2024 1:26 PM

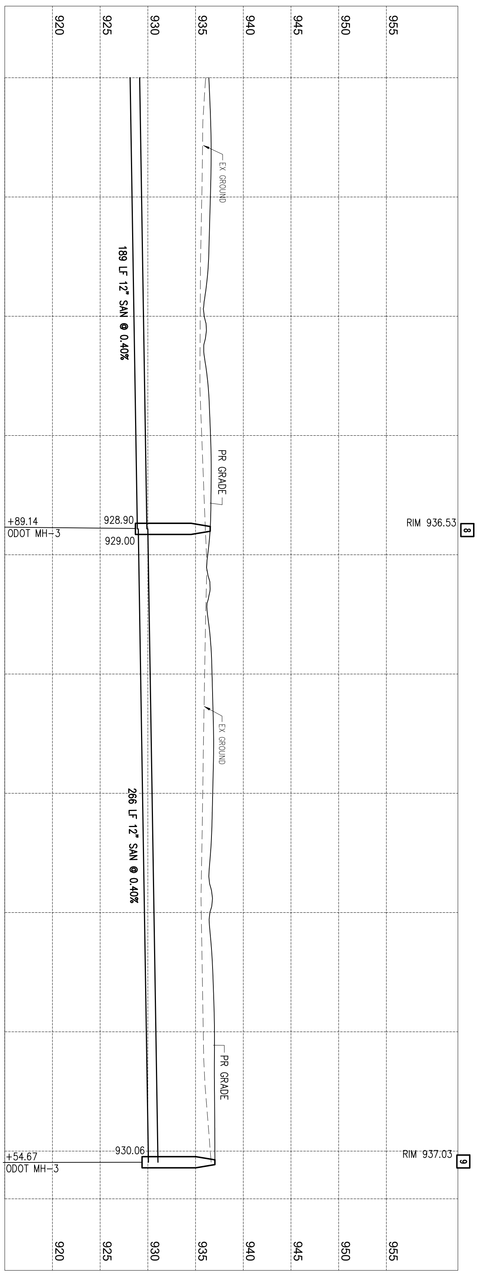

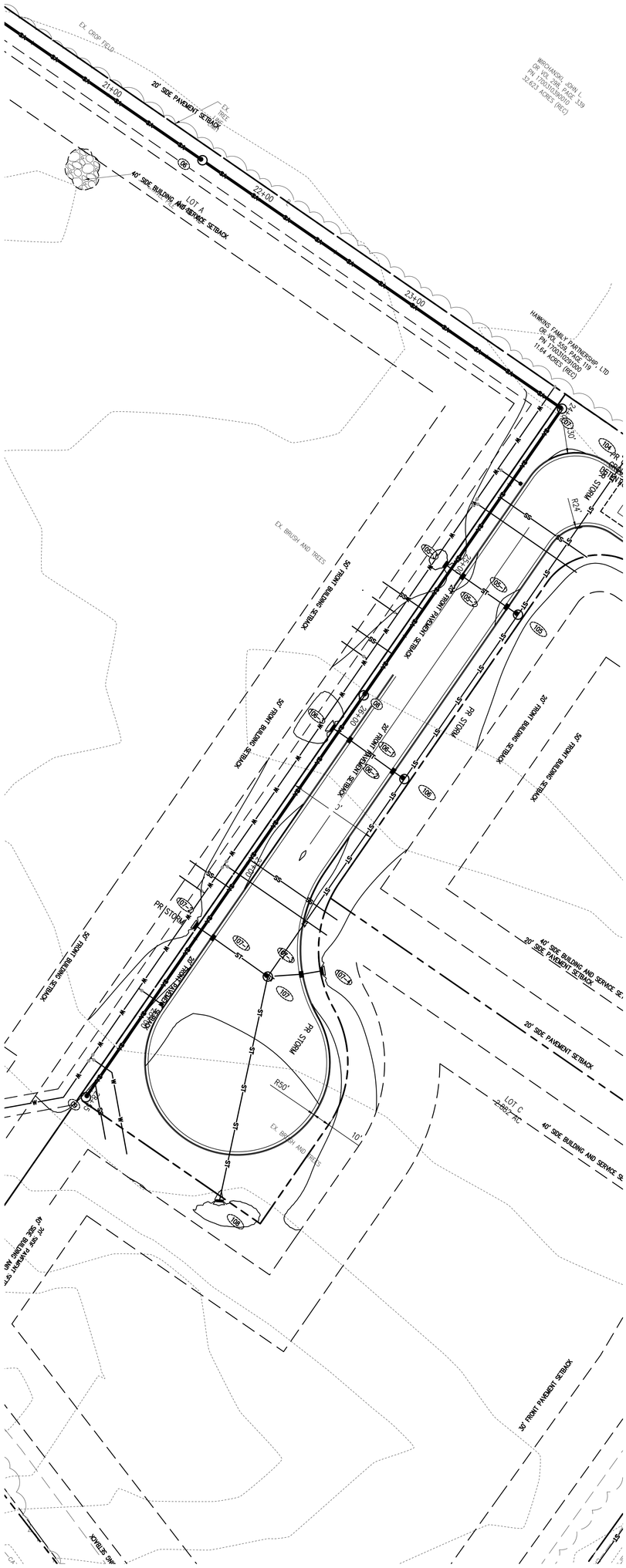

17	SANITARY PLAN & PROFILE	PRELIMINARY PLAN FOR THE SHOPS AT HAWK'S LANDING POST ROAD, PLAIN CITY, OH 43064	PREPARED FOR: HFPL DUBLIN, LLC 4592 ULMERTON RD, SUITE 100 CLEARWATER, FL 33762	Mannik Smith GROUP www.MannikSmithGroup.com TECHNICAL SKILL. CREATIVE SPIRIT.	1160 DUBLIN ROAD SUITE 100 COLUMBUS, OH 43215 TEL: 614.441.4222 FAX: 888.488.7340 PROJECT DATE: 05/23/24 PROJECT NO: B1740002 DRAWN BY: MAO CHECKED BY: AAB	NO.	DATE	BY	DESCRIPTION

LEGEND

Bs – BROOKSTONE SILTY CLAY LOAM, FINE, TEXTURE, 0 TO 2 PERCENT SLOPES

CrA – CROSBY SILT LOAM, SOUTHERN OHIO TILL PLAIN, 0 TO 2 PERCENT SLOPES

SCALE: 1 IN = 50 FT

18	SOILS MAP	PRELIMINARY PLAN FOR THE SHOPS AT HAWK'S LANDING POST ROAD, PLAIN CITY, OH 43064	PREPARED FOR: HFPL DUBLIN, LLC 4592 ULMERTON RD, SUITE 100 CLEARWATER, FL 33762	Mannik Smith GROUP www.MannikSmithGroup.com TECHNICAL SKILL. CREATIVE SPIRIT.	1160 DUBLIN ROAD SUITE 100 COLUMBUS, OH 43215 TEL: 614.441.4222 FAX: 888.488.7340 PROJECT DATE: 05/23/24 PROJECT NO: B1740002 DRAWN BY: MAO CHECKED BY: AAB	NO.	DATE	BY	DESCRIPTION